Product information sheet SOLIS 180-IF

Item no. 526114

Benefits



- A harmonious interplay between functional and visual elements
- High-quality features with covered C-overflow and InFino drain system – elegantly integrated and easy-care
- Convenient bowl volume and base surface designed for practical use
- Elegant IF flat-rim for flushmount and for installation from above
- Functional accessories optionally available

Planning information

- Note: Installing a kitchen mixer tap, drain remote control or soap dispenser in laminate worktops requires a flexible sealing tape.
- Please order drain connections for combinations of two individual bowls separately.

Scope of supply

- waste kit with space-saving pipe
- 3 ½'' InFino basket strainer
- fixing kit

Details

Min cabinet size	300 mm

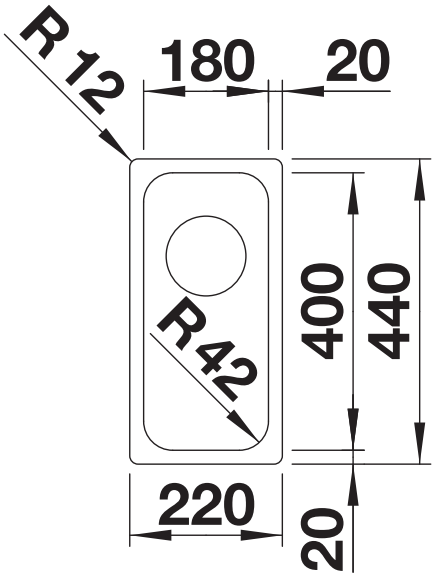

Top view

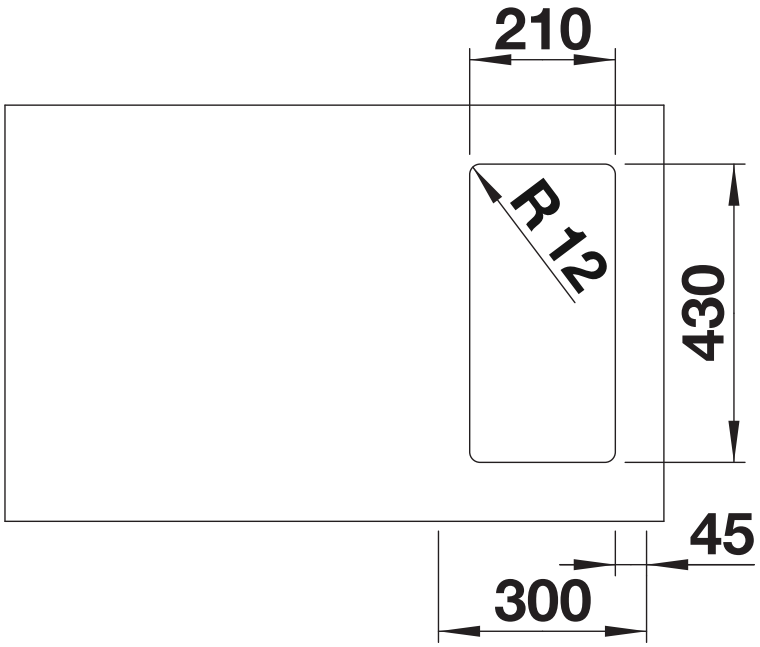

Cut-out

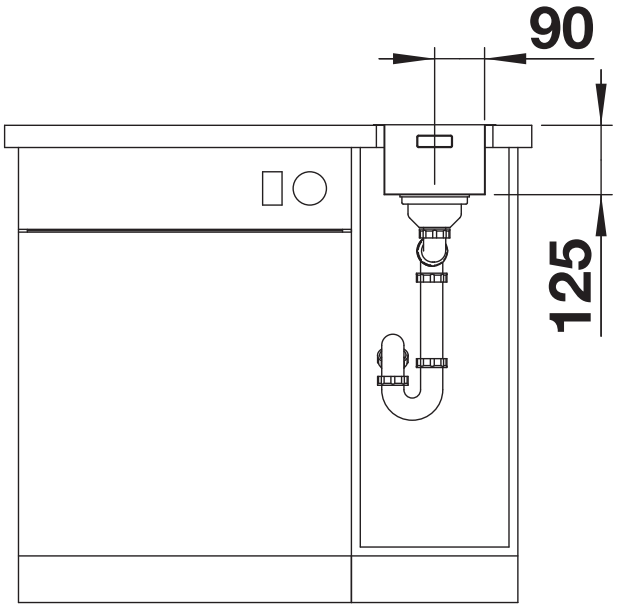

Front view

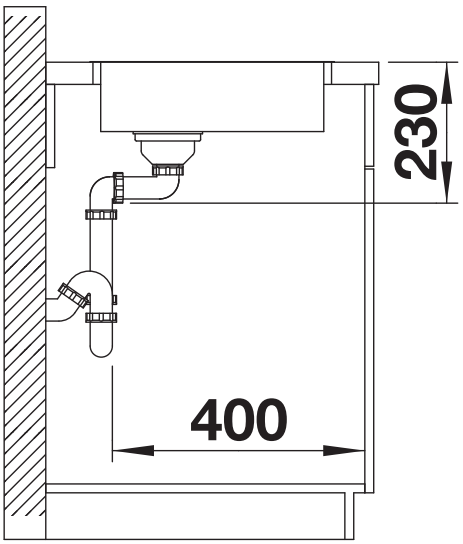

Side view