Product information sheet VINTERA XL 9-UF

Item no. 526102

Benefits



- Striking sink with farmhouse flair, ideal for modern kitchen designs
- Extra-large bowl provides plenty of room
- Perfect fit: right-angled apron front fits the width of a 90 cm cabinet
- One model for flush-mount or undermount installation

Colours



Available colours:

black
anthracite
rock grey
volcano grey
white
soft white
tartufo
coffee

SILGRANIT rock grey

Planning information

- Please note the installation details and cut-out information for:
- Flushmount: https://youtu.be/CGRlPZsbQ6Y
- Undermount: https://youtu.be/jB-uTpOrpCc

Scope of supply

- waste kit with space-saving pipe
- 3 ½‘‘ InFino basket strainer

Details

Min cabinet size	900 mm

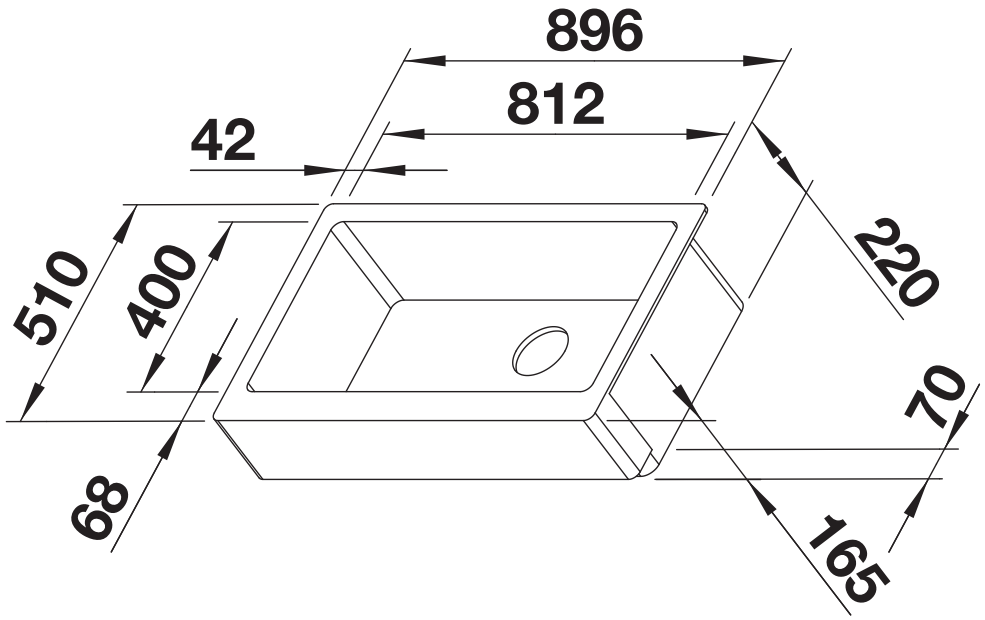

Top view

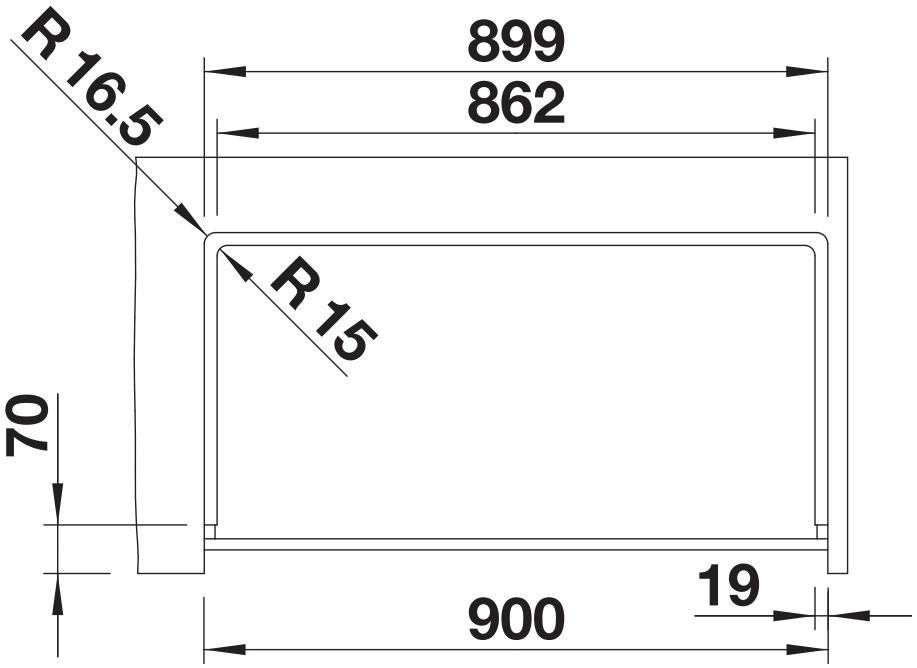

Cut-out

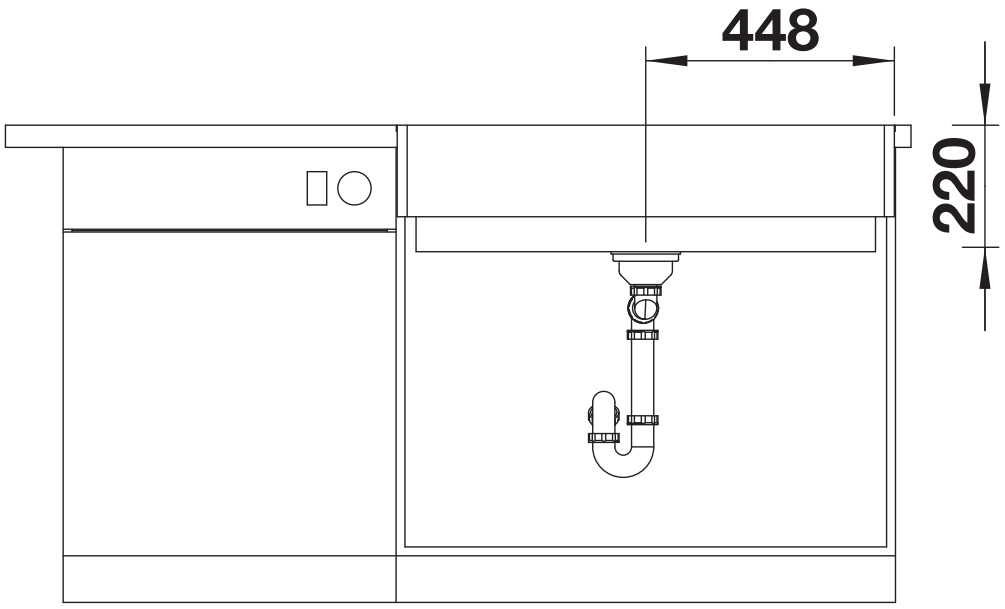

Front view

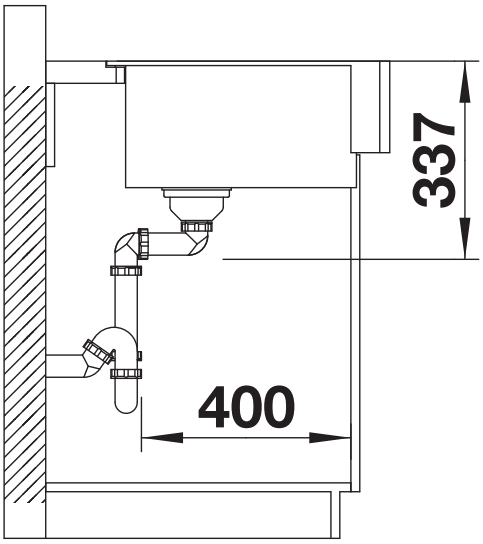

Side view