Product information sheet SUBLINE 400-U

Item no. 525990

Benefits



- Undermount bowl for discerning demands on design
- Timelessly elegant, contoured bowl design
- Entire system for a wide variety of plans featuring large and small bowls
- High-quality features with covered C-overflow and InFino drain system – elegantly integrated and easy-care
- Optional versatile accessories are available

Colours



SILGRANIT black

Available colours:

black
anthracite
rock grey
volcano grey
white
soft white
tartufo
coffee

Planning information

- Cut-out radius: 10 mm
- Please order waste connections for combinations of two individual bowls separately.

Scope of supply

- waste kit with space-saving pipe
- 3 ½'' InFino basket strainer
- fixing kit

Details

Min cabinet size	500 mm

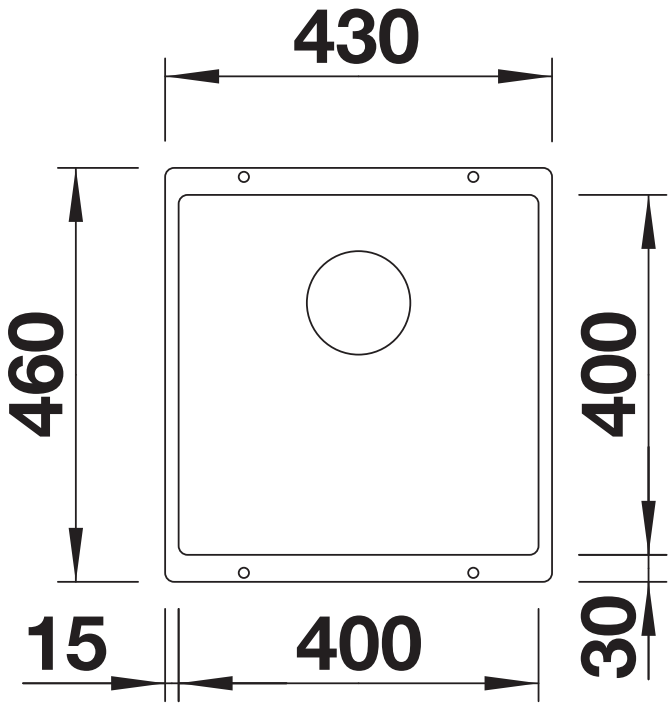

Top view

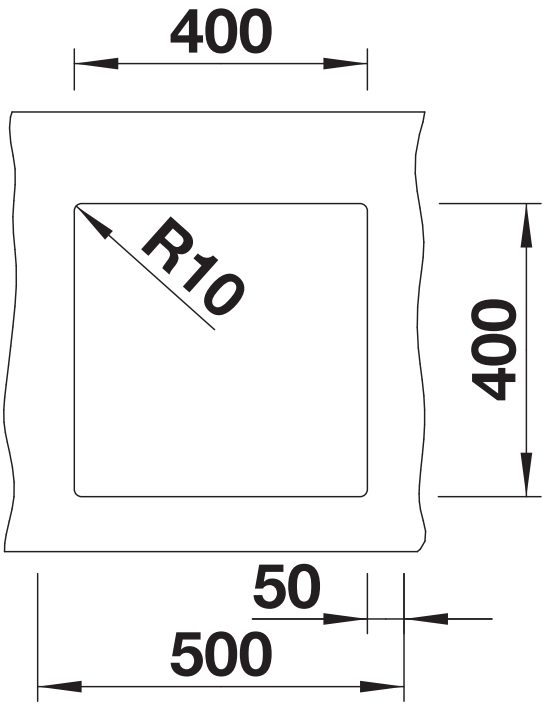

Cut-out

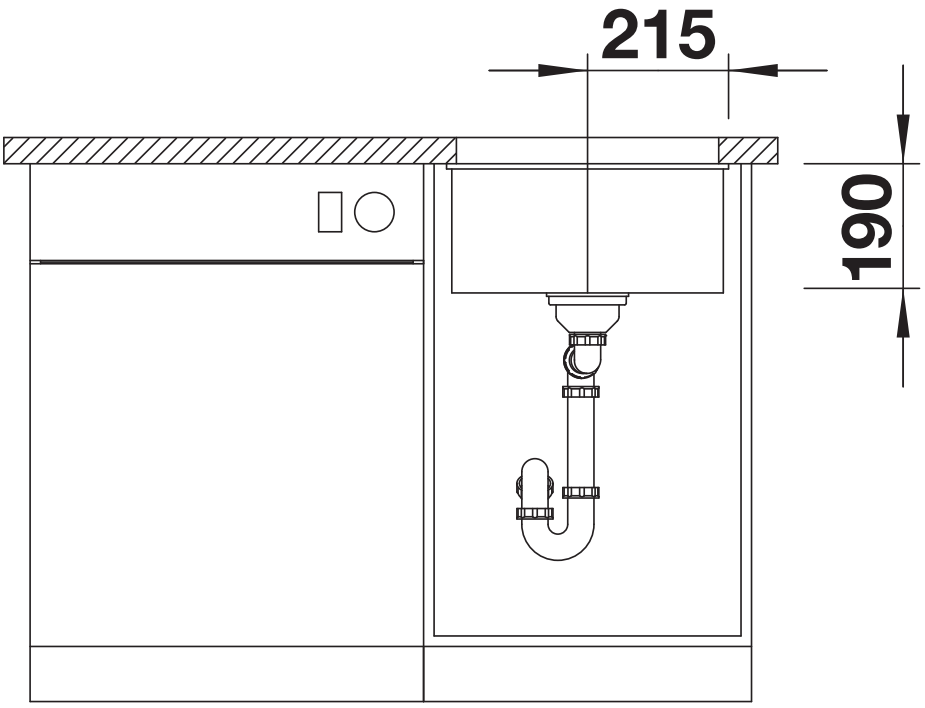

Front view

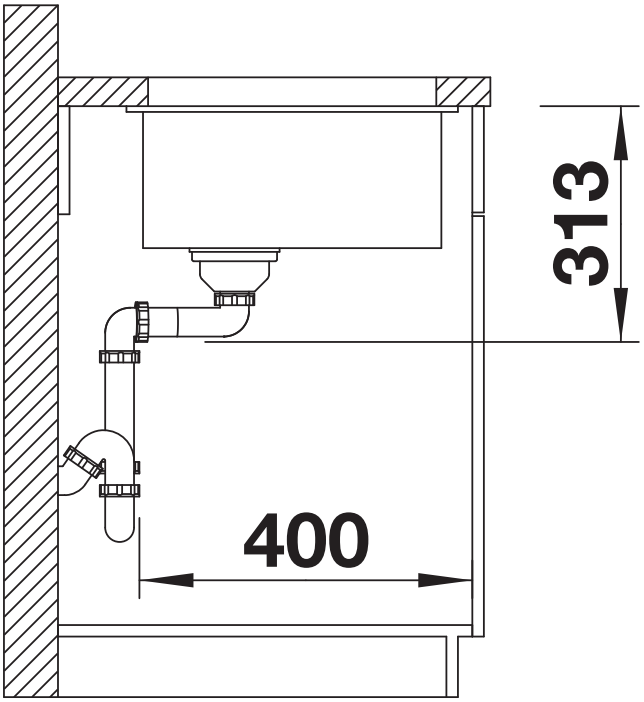

Side view