Product information sheet VILLAE Farmhouse Single

Item no. 525163

Benefits



- Tastefully traditional with design updates for that country style look
- Stylish crystal white ceramic sinks
- Single bowl for the 80 cm cabinet

Colours



Available colours:
crystal white glossy

Ceramic crystal white glossy

Planning information

- Min. cabinet width: 800 mm
- Internal bowl depth: 196 mm
- External bowl height: 220 mm
- Cut out size: Template provided. Undermount.

Scope of supply

- Waste kit
- 3 ½'' basket strainer

Details

Min cabinet size	800 mm

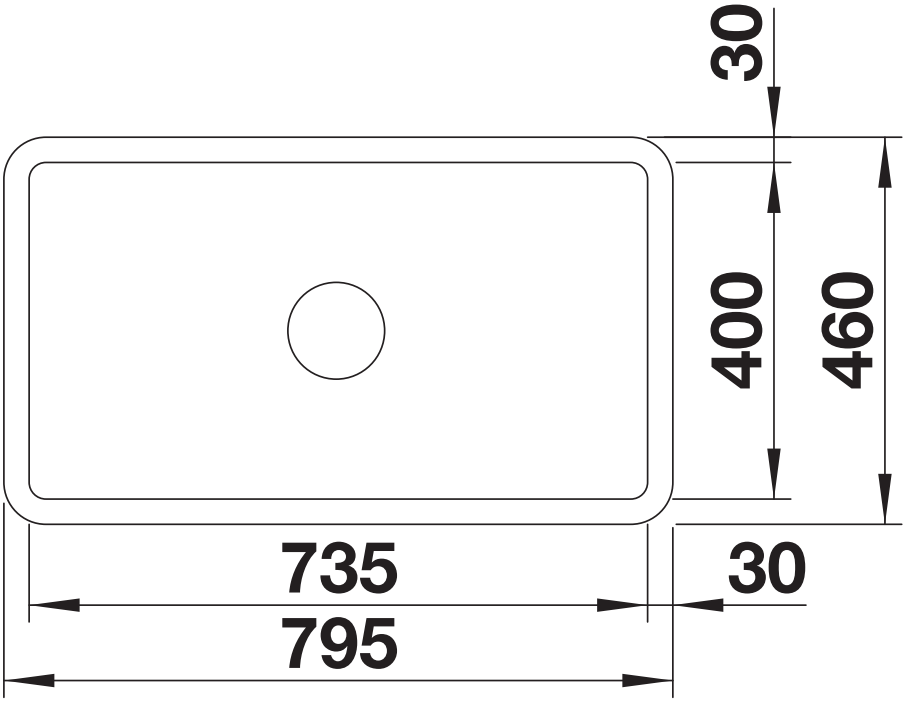

Top view

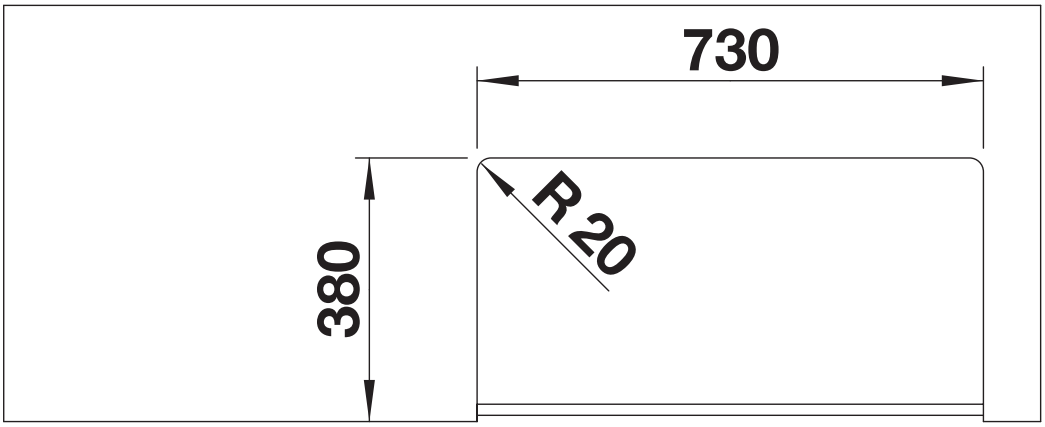

Cut-out

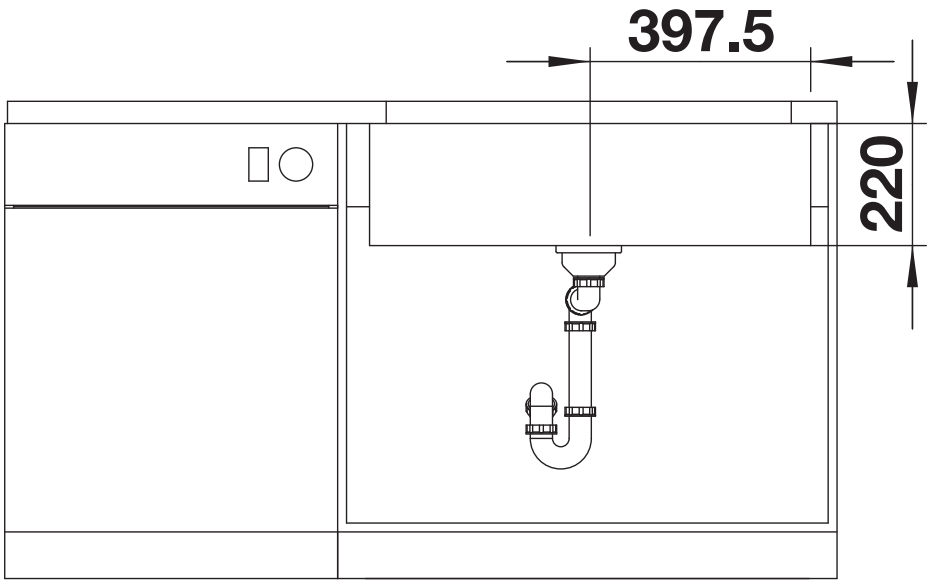

Front view

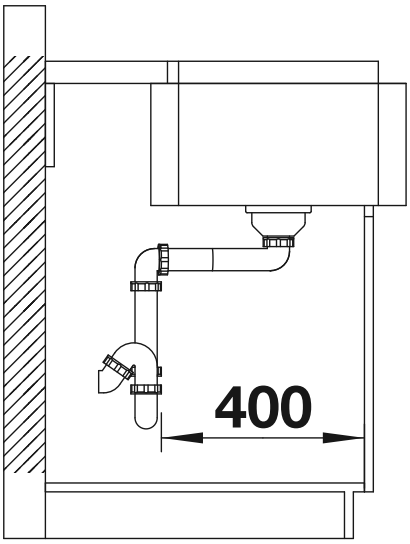

Side view