Product information sheet CANDOR-S

Item no. 525125

Benefits



- High-quality design in solid stainless steel, brushed finish
- Clear mixer tap design for modern kitchens
- High arched outlet for easy filling of pots and vases
- Concealed pull-out handspray
- More freedom of movement with installations against a wall thanks to the control lever with vertical neutral position
- Energy-saving: basic setting of the control lever to cold start

Colours



Stainless steel stainless steel

Available colours:
stainless steel

Scope of supply

- 190° swivel spout for greater reach
- Ø 35 mm tap hole required
- With ceramic disk cartridge
- Spray made of plastic
- Hidden spray with rearward guide pin
- Nylon-sheathed spray hose
- Hose weight for reliable retraction
- Flexible connector pipes, 700 mm long and ⅜'' nut
- Stabilisation plate to increase the stability of the tap when fitted in stainless steel sinks
- With non-return valve and thus guaranteed against reflux in accordance with EN 1717

Details

Flow rate	5 l
Swivel range	190 °

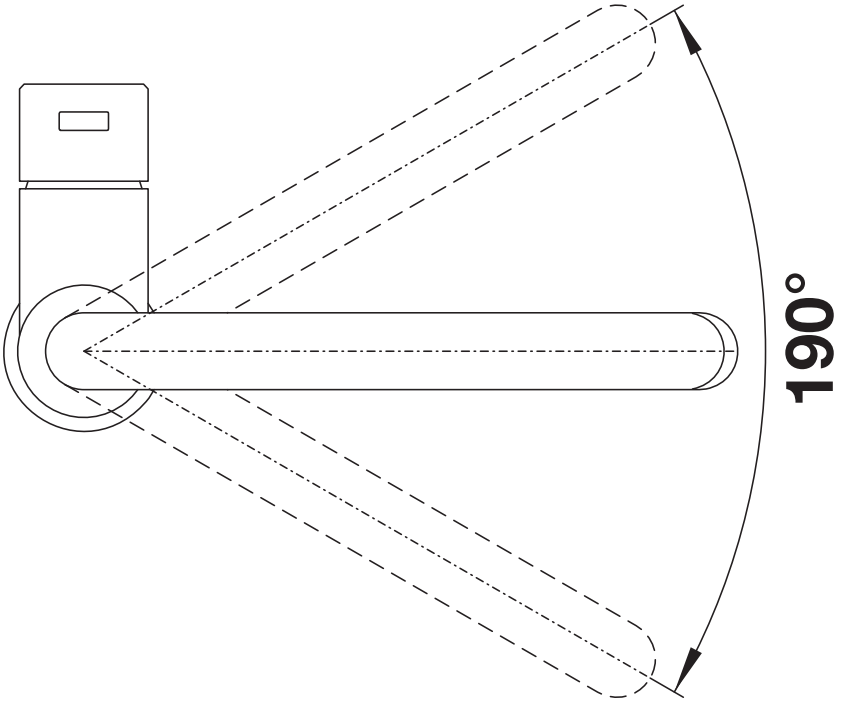

Swivel range

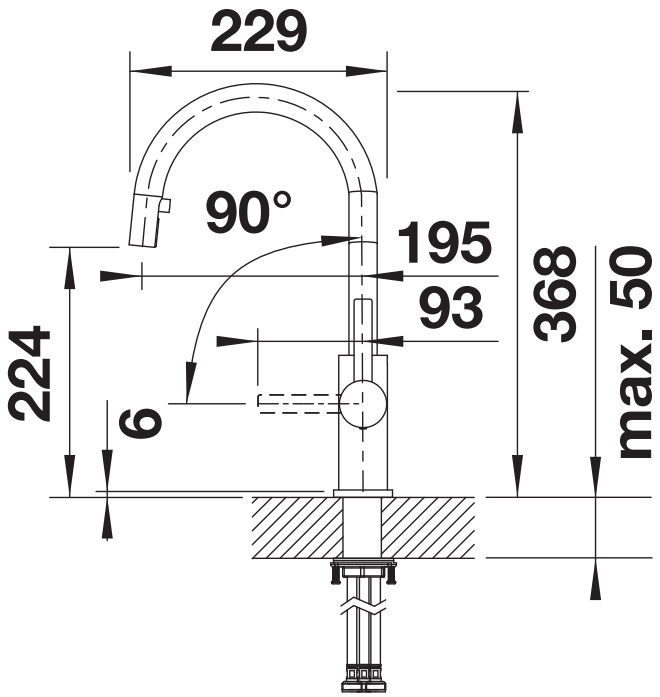

Side view

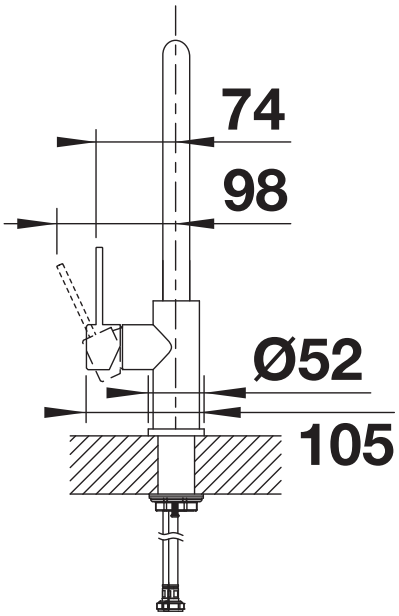

Side view lever