Product information sheet LEXA 8

Item no. 524961

Benefits



- Modern sink unit for any kitchen ambience
- Harmonious design of outer contours and radii
- Generously proportioned, symmetrically designed bowls – ideal for extended cooking pleasure
- High-quality features with InFino drain system - elegantly integrated and easy-care
- Can be installed reversibly

Colours



Available colours:

rock grey
coffee
tartufo
anthracite
black
soft white
volcano grey
white

SILGRANIT rock grey

Scope of supply

- waste kit with space-saving pipe
- 2 x 3 ½'' InFino basket strainer

Details

Min cabinet size	800 mm

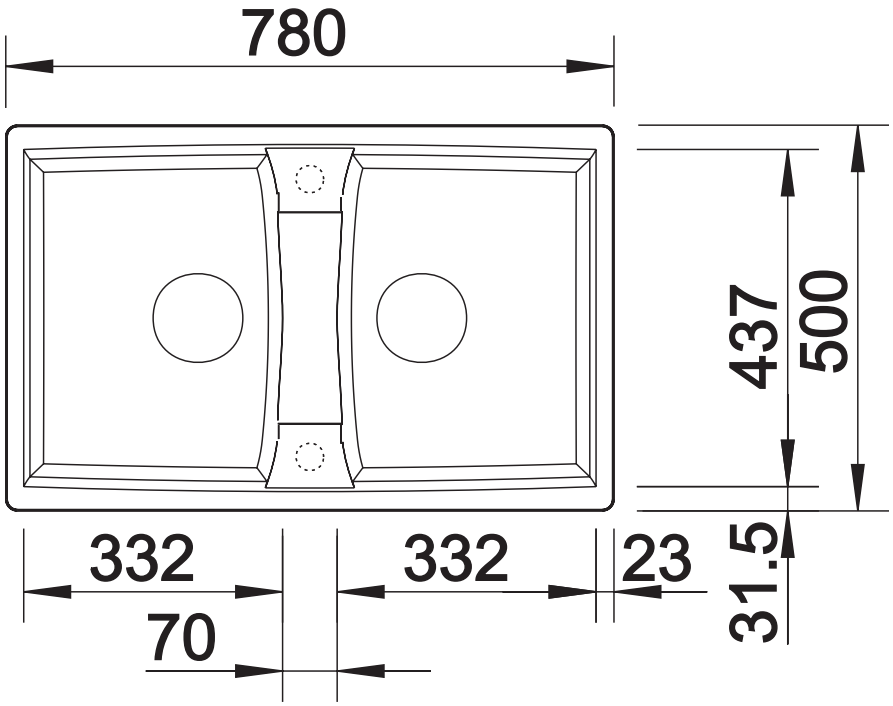

Top view

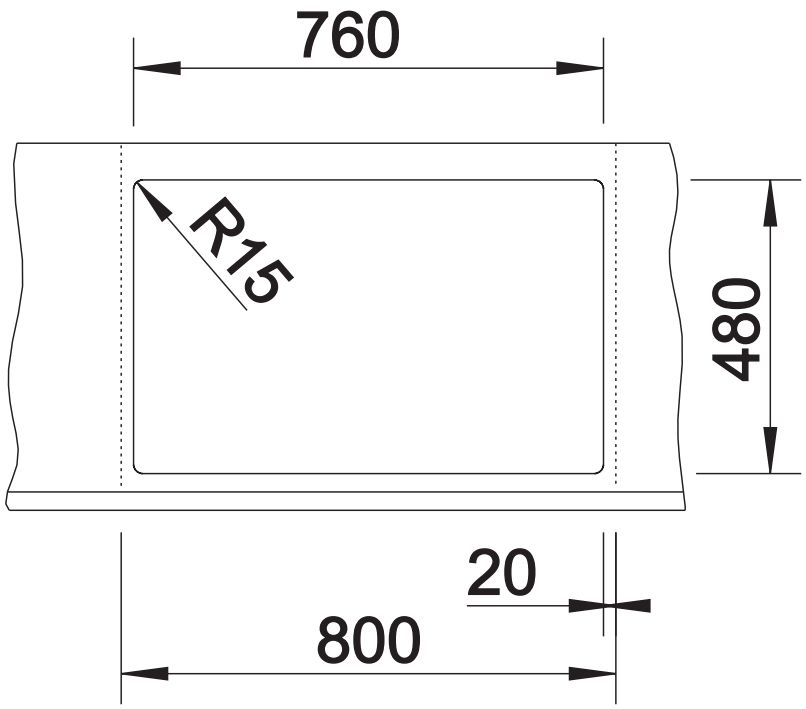

Cut-out

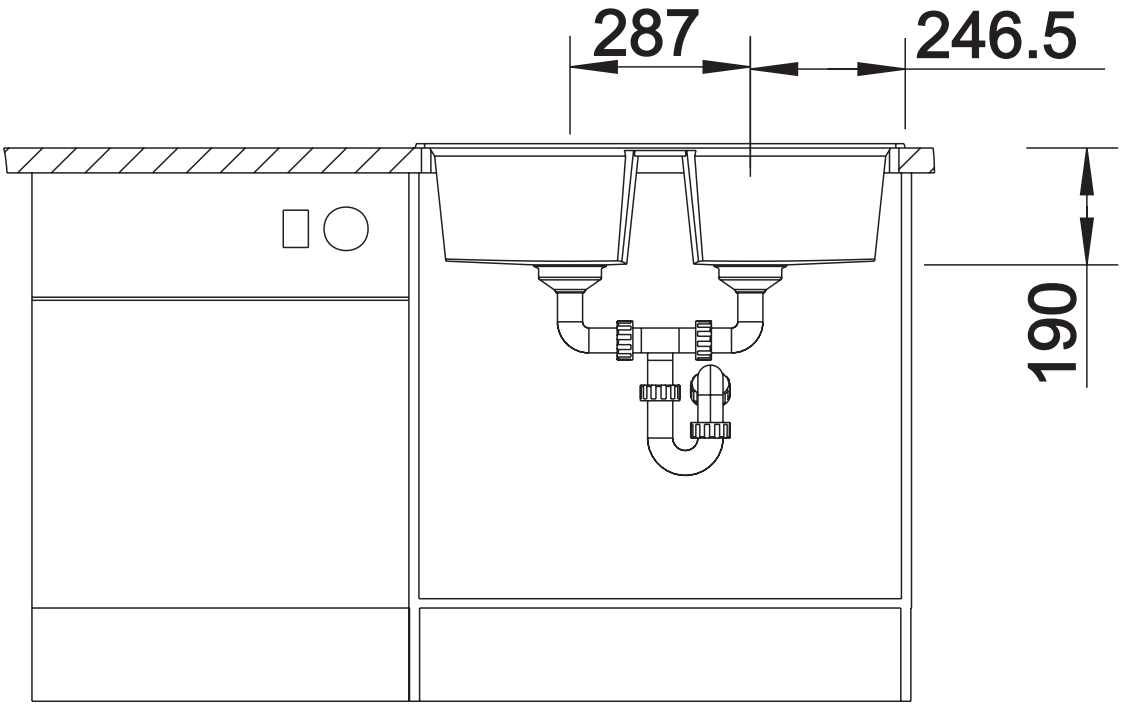

Front view

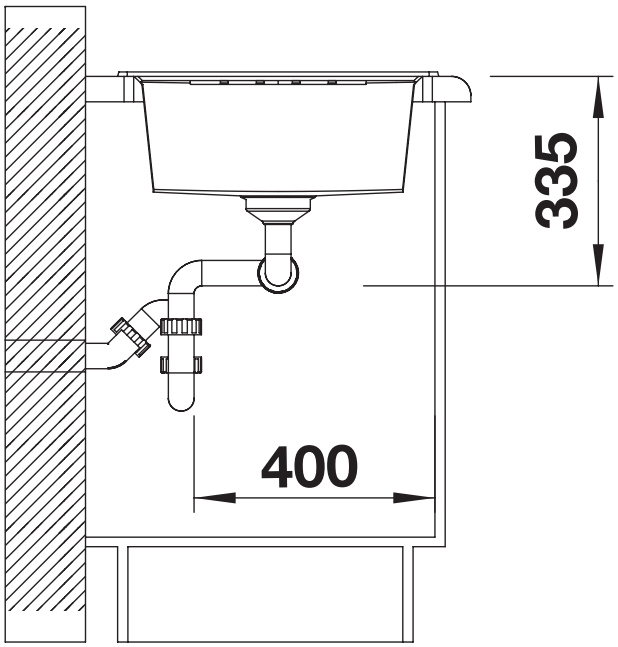

Side view