Product information sheet FAVUM 45 S

Item no. 524232

Benefits



- Timeless, functional design with a clear linearity
- Large bowl and large drainer with a harmoniously integrated overflow
- Tight bowl radii for extended filling volume
- Large sink with small space requirement of 86 x 43.5 cm
- Can be installed reversibly

Colours



Available colours:

anthracite
white
coffee
black
soft white
volcano grey

SILGRANIT coffee

Planning information

- Cut out: 840 x 415 x R15
- Universal handing

Scope of supply

- waste kit with space-saving pipe
- 3 ½'' basket strainer

Details

Min cabinet size 450 mm

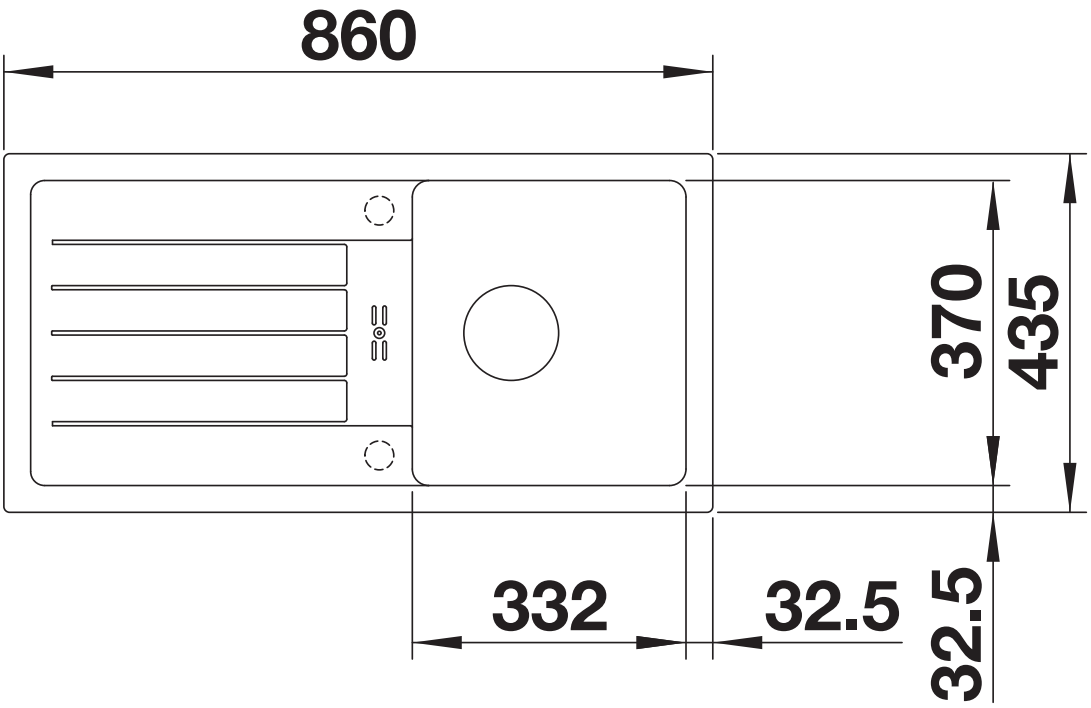

Top view

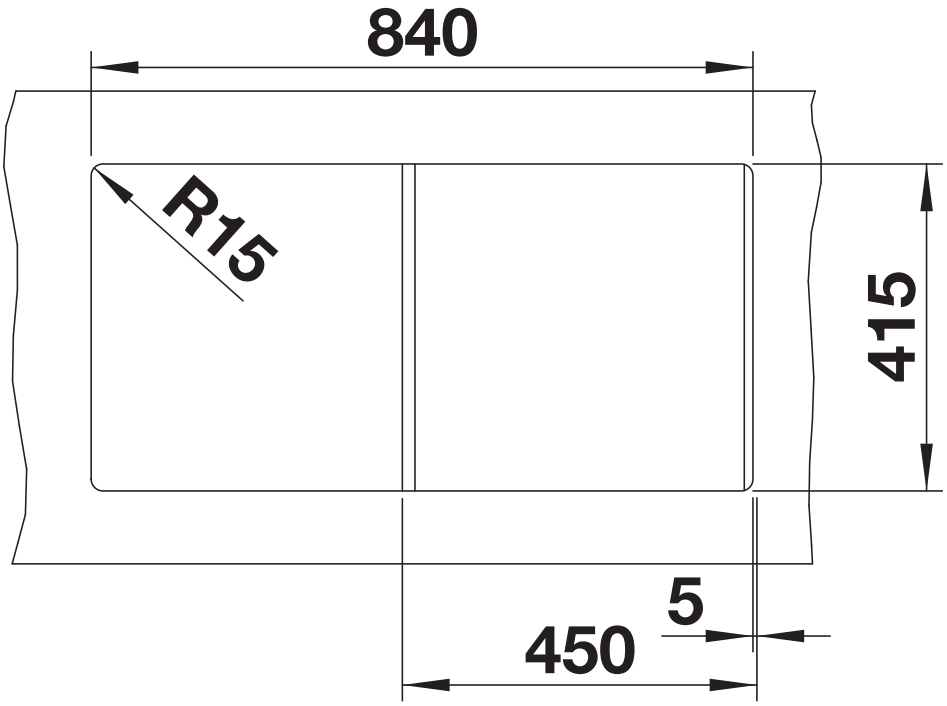

Cut-out

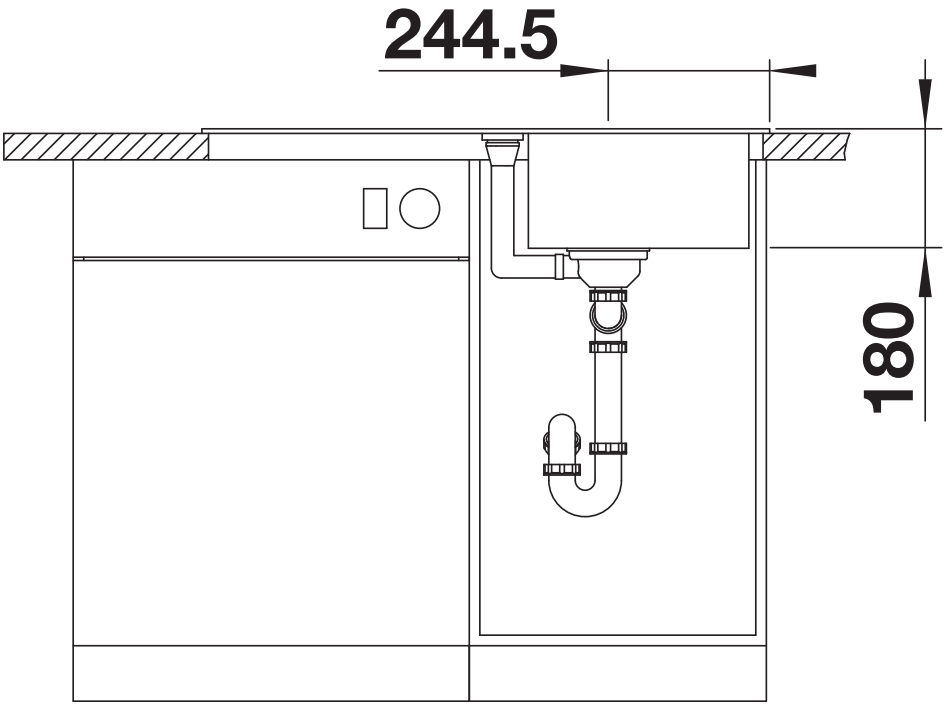

Front view

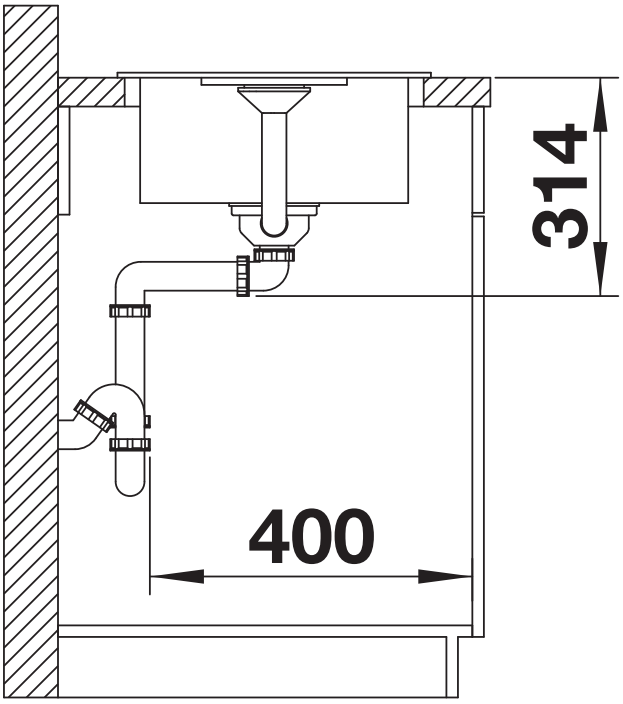

Side view