Product information sheet ZENAR XL 6 S Compact

Item no. 523782

Benefits



- Compact outer dimension for comfort in limited space
- Ultra-large bowl with a small drainer area
- Functional area with flowing transition to draining board
- Optional functional accessories are available
- High-quality features with drain remote control, covered C-overflow and InFino drain system – elegantly integrated and easy-care

Colours



Available colours:

anthracite
rock grey
white
tartufo
coffee
black
soft white
volcano grey

SILGRANIT tartufo

Planning information

- Cut out size: 760 x 490 x R15
- Right hand bowl only

Scope of supply

- waste kit with space-saving pipe
- 3 ½'' InFino basket strainer with drain remote control (rotary switch)

Details

Min cabinet size 600 mm

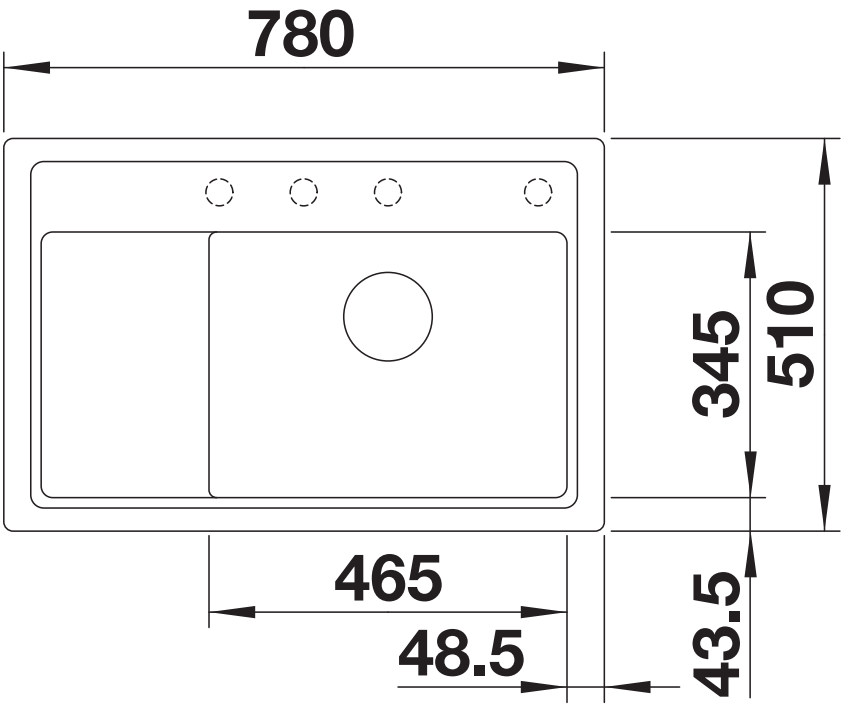

Top view

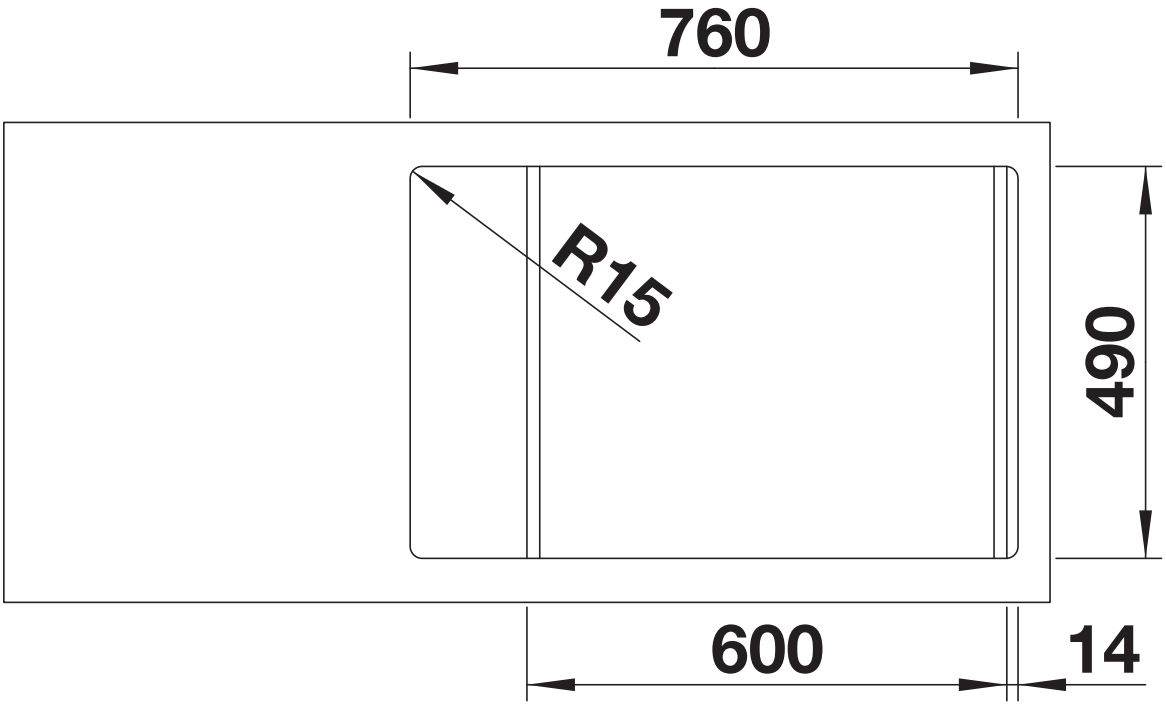

Cut-out

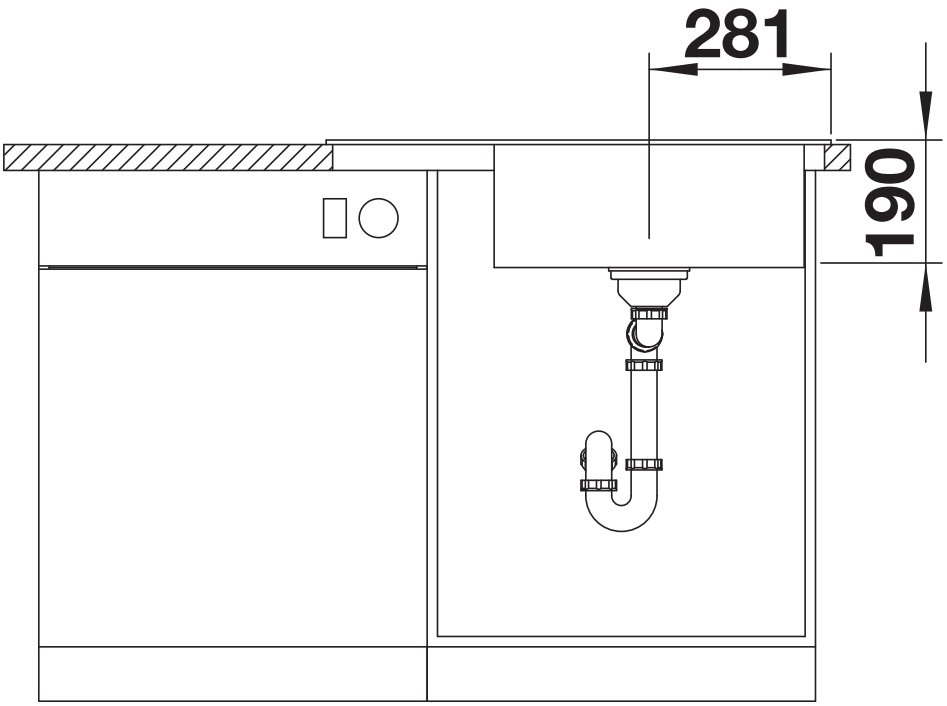

Front view

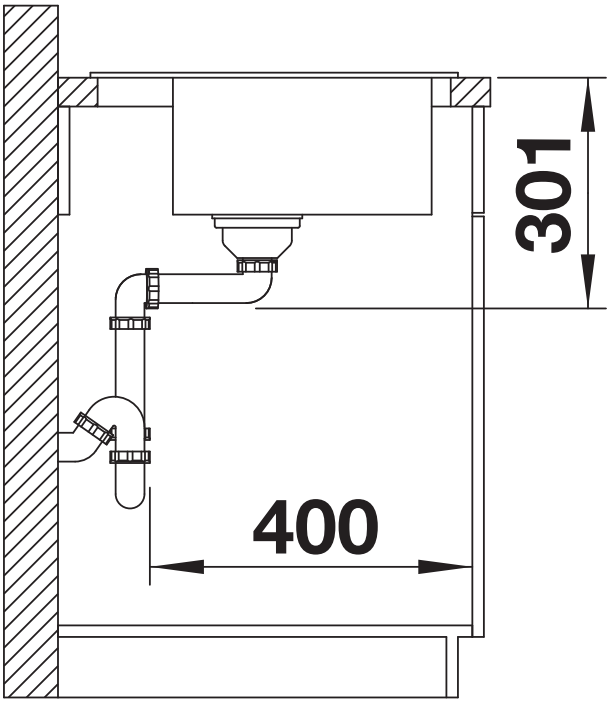

Side view