Product information sheet SUBLINE 350/150-U

Item no. 523746

Benefits



- Large bowl capacity
- Mounting involves no additional expense
- Ceramic for easy care
- Timelessly elegant, contoured bowl design
- A wide range of optional accessories for added functionality
- InFino drain system – gracefully integrated and easy-care

Colours

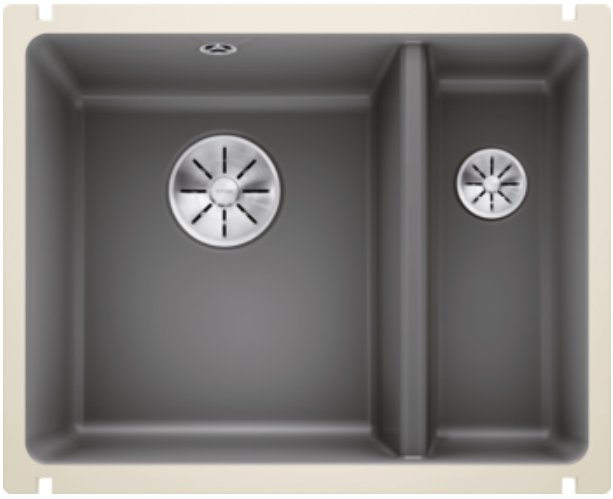

Available colours:

black
basalt
crystal white glossy
magnolia glossy

Ceramic basalt

Planning information

- Cut-out radius: 15 mm
- Note: minimum worktop thickness 25 mm. Please follow the assembly instructions.
- * If necessary, cut out wall units.

Scope of supply

- waste kit with space-saving pipe
- 3 ½'' and 1 ½'' InFino basket strainer
- fixing kit

Details

Min cabinet size	600 mm

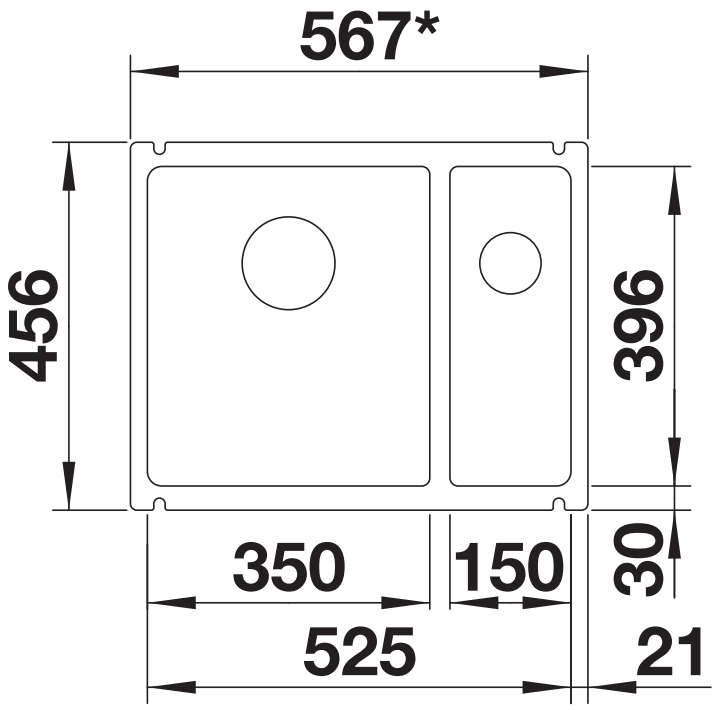

Top view

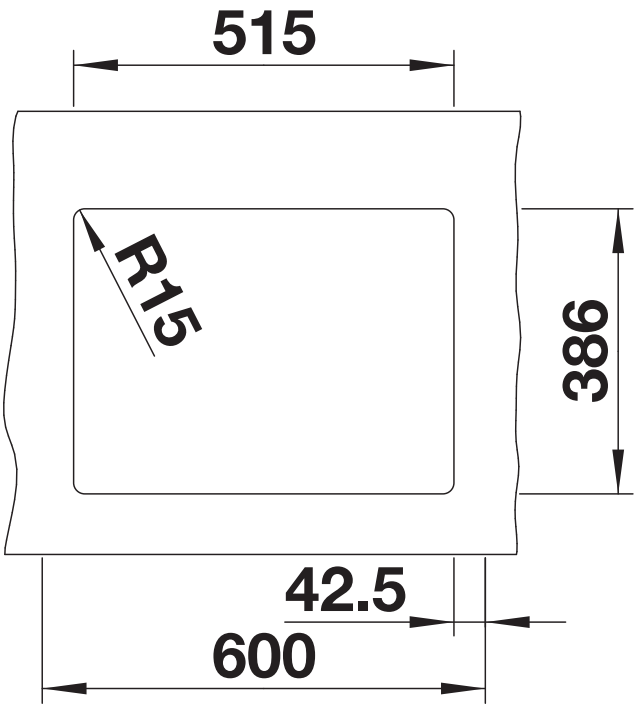

Cut-out

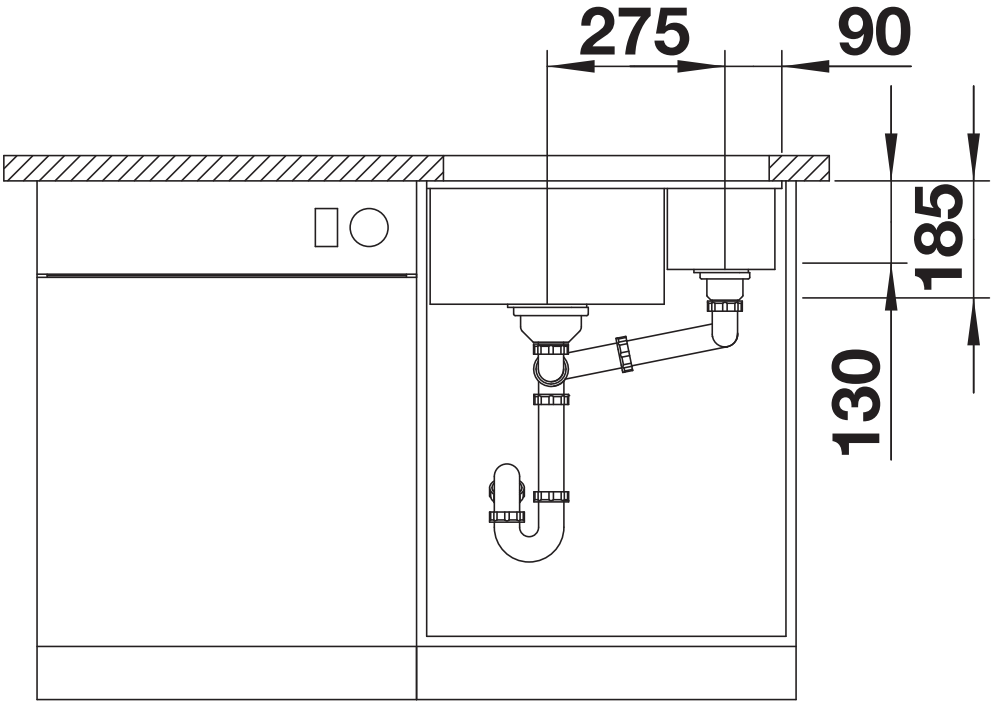

Front view

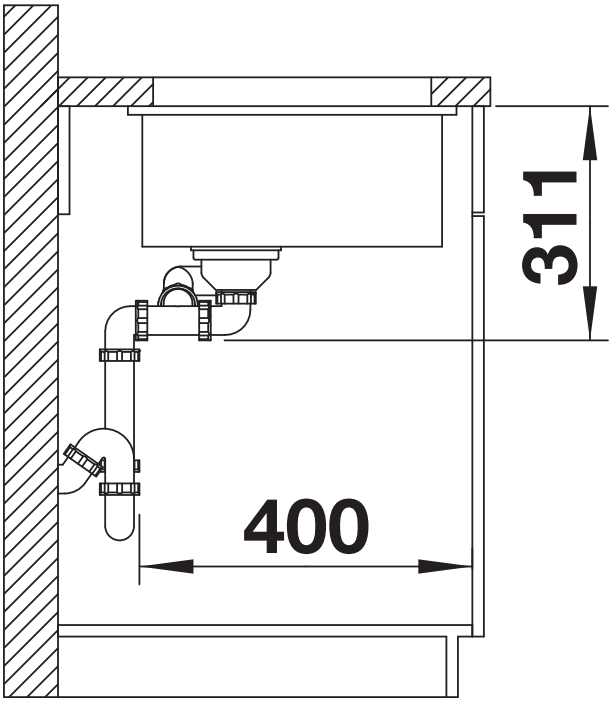

Side view