Product information sheet SUBLINE 500-U

Item no. 523734

Benefits



- Large bowl capacity
- Mounting involves no additional expense
- Ceramic for easy care
- Timelessly elegant, contoured bowl design
- For cabinets from 60 cm
- A wide range of optional accessories for added functionality
- InFino drain system – gracefully integrated and easy-care

Colours



Available colours:

black
crystal white glossy
magnolia glossy
basalt

Ceramic magnolia glossy

Planning information

- Cut-out radius: 15 mm
- Note: minimum worktop thickness 25 mm. Please follow the assembly instructions.

Scope of supply

- waste kit with space-saving pipe
- 3 ½'' InFino basket strainer
- fixing kit

Details

Min cabinet size	600 mm

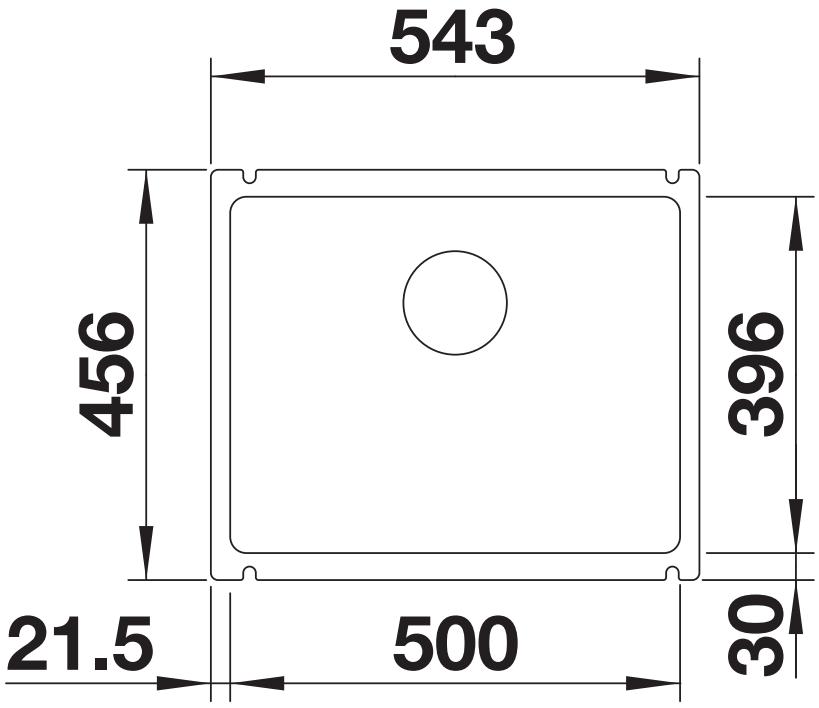

Top view

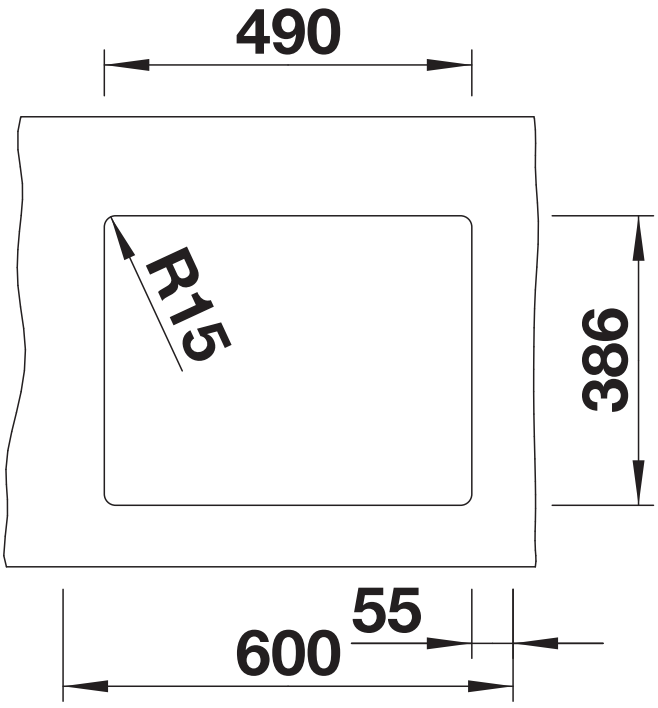

Cut-out

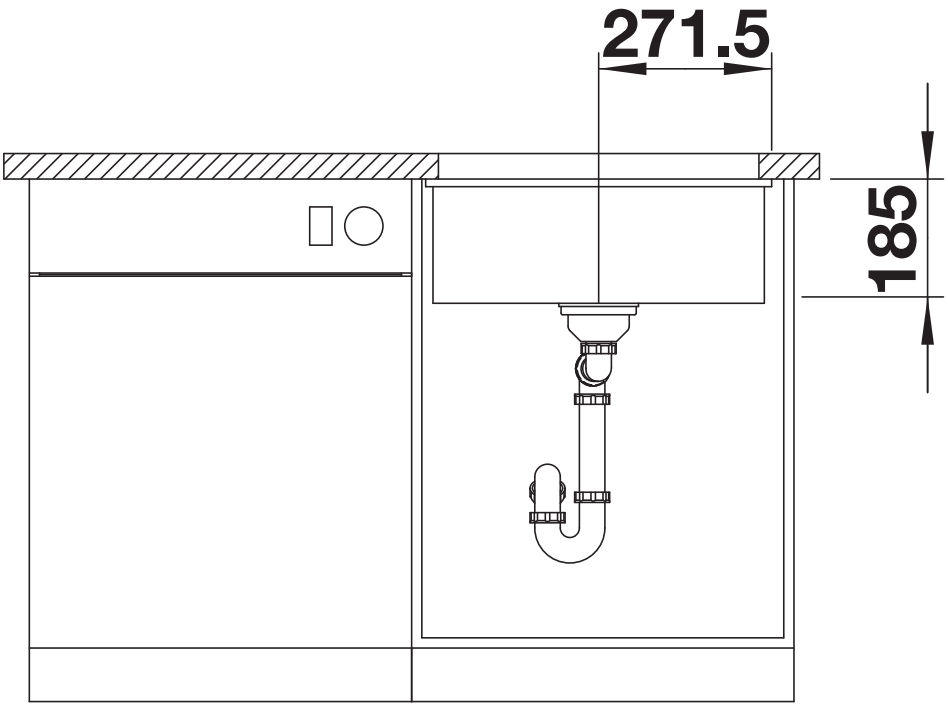

Front view

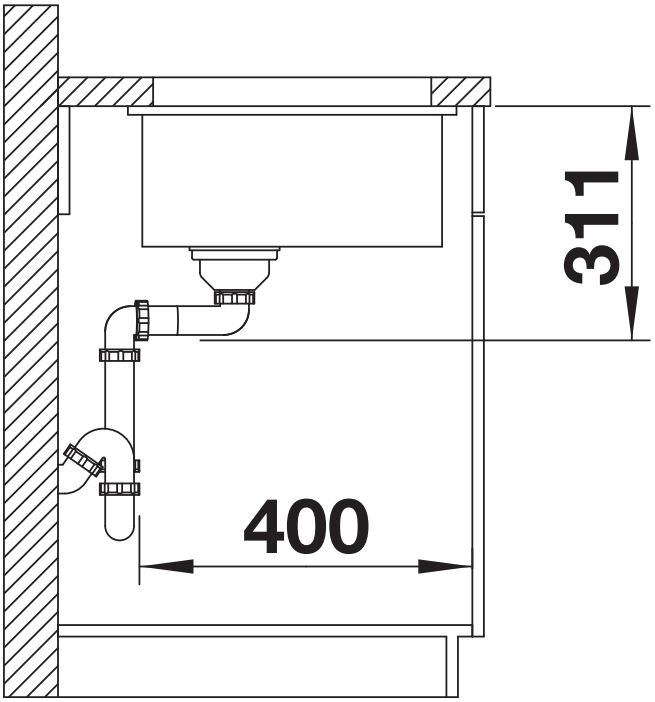

Side view