# Product information sheet SUBLINE 320-U

Item no. 523407

## Benefits



- Undermount bowl for discerning demands on design
- Timelessly elegant, contoured bowl design
- Entire system for a wide variety of plans featuring large and small bowls
- High-quality features with covered C-overflow and InFino drain system – elegantly integrated and easy-care
- Optional versatile accessories are available

## Colours



SILGRANIT rock grey

Available colours:

black
anthracite
rock grey
volcano grey
white
soft white
tartufo
coffee

## Planning information

- Cut-out radius: 10 mm
- Please order waste connections for combinations of two individual bowls separately.

## Scope of supply

- waste kit with space-saving pipe
- 3 ½'' InFino basket strainer
- fixing kit

## Details

| | |
|---|---|
| Min cabinet size | 400 mm |

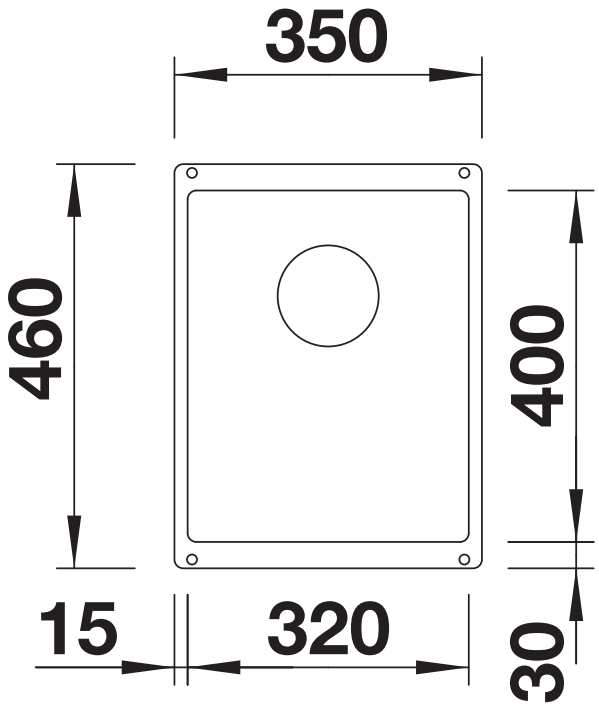


Top view

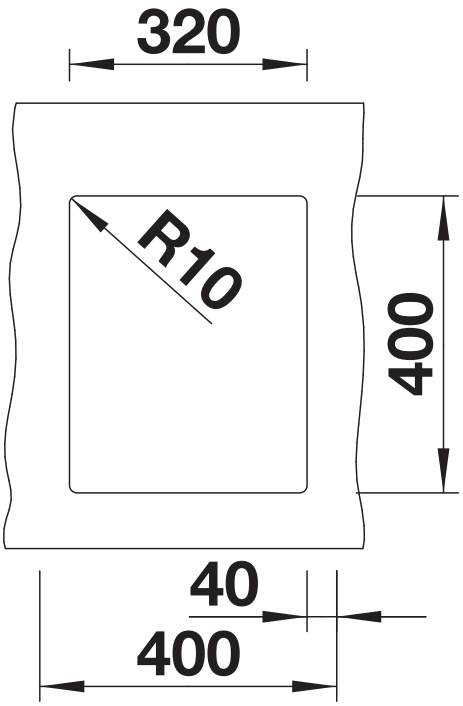


Cut-out

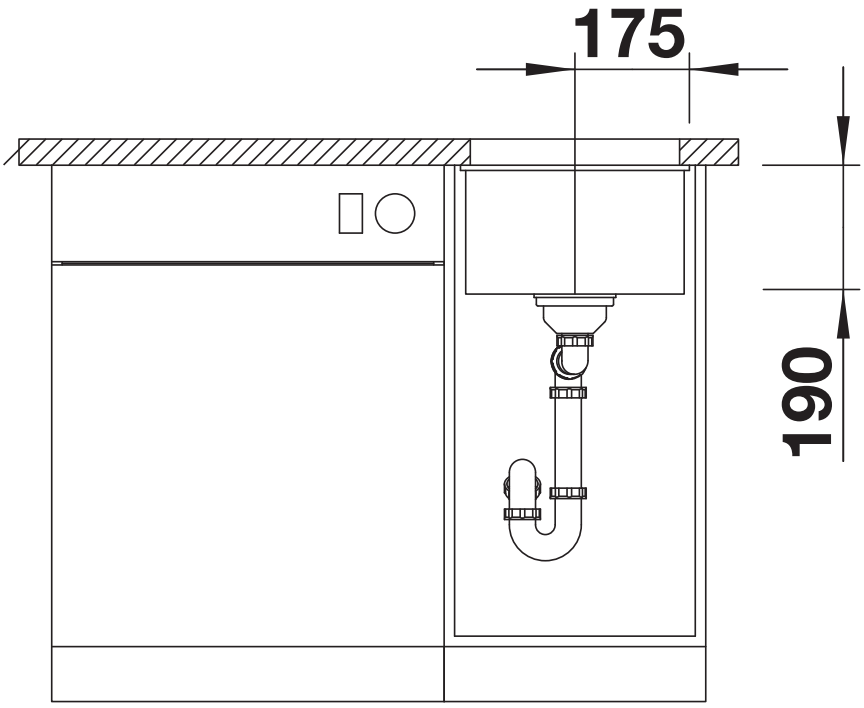


Front view

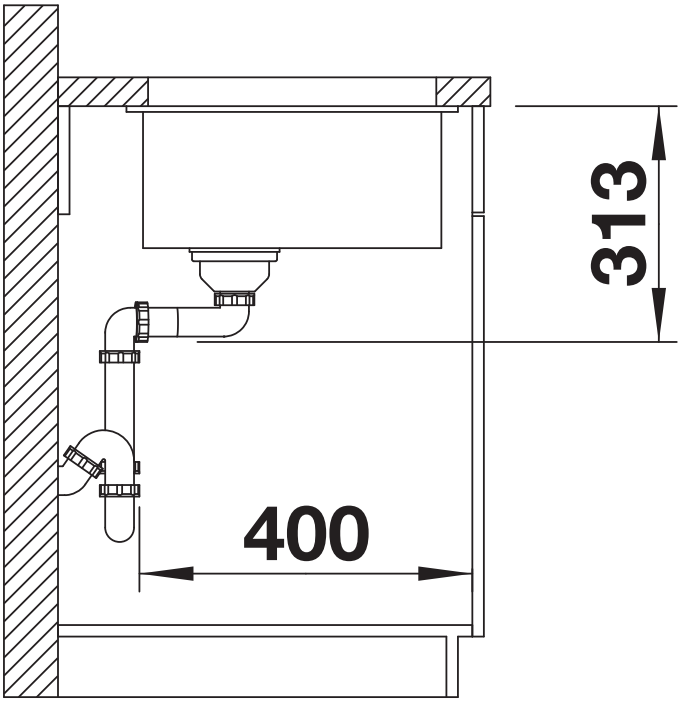


Side view