Product information sheet FONTAS II Filter

Item no. 523137

Benefits



- Comfortable 3-in-1-mixer tap with cold and warm water lever on the right, filtered water lever on the left
- Separate water circuit with extra spout for filtered water – no mixture with mains water
- Space-saving and practical: with the 3-in-1-tap no additional drilling is required for filtered water supply
- Spout can be swivelled through 360° for greater cover
- Surface finishes to perfectly match sinks and bowls: Colour versions for coloured SILGRANIT models
- Needs to be installed with a water filter system

Colours



brass rock grey

Available colours:

anthracite
white
tartufo
rock grey
black
volcano grey
soft white

Scope of supply

- 360° swivel spout for greater reach
- Ø 35 mm tap hole required
- Ceramic valve and disk cartridge
- Clear stream aerator
- Flexible connector pipes, 500 mm long and ⅜'' nut
- Stabilisation plate to increase the stability of the tap when fitted in stainless steel sinks
- Filter system not included

Details

Flow rate	9 l
Swivel range	360 °

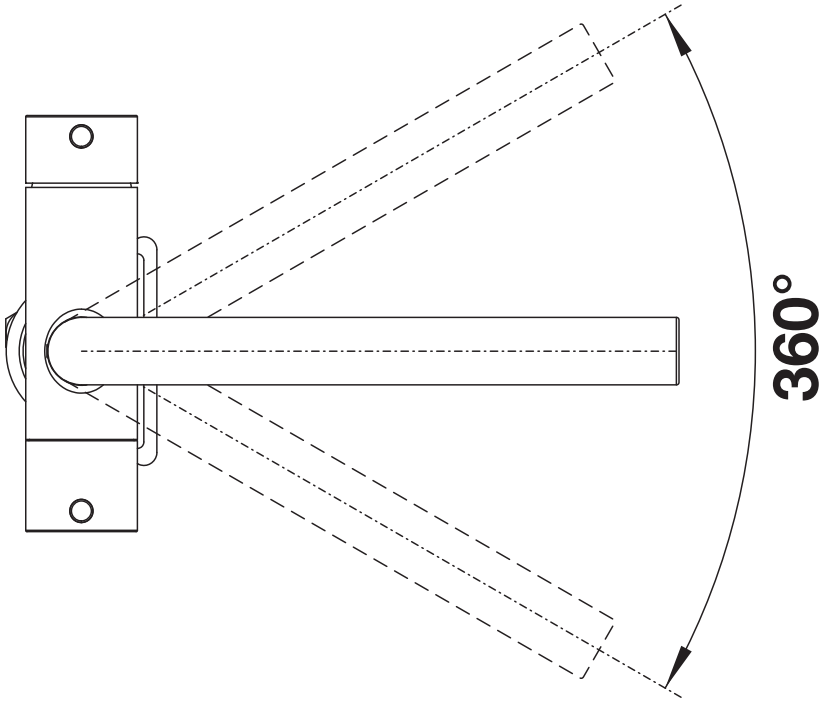

Swivel range

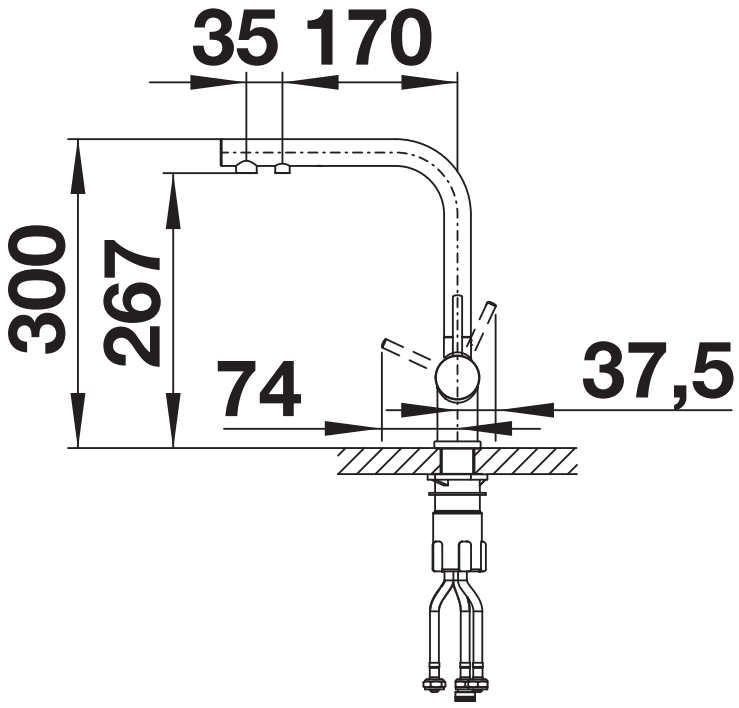

Side view

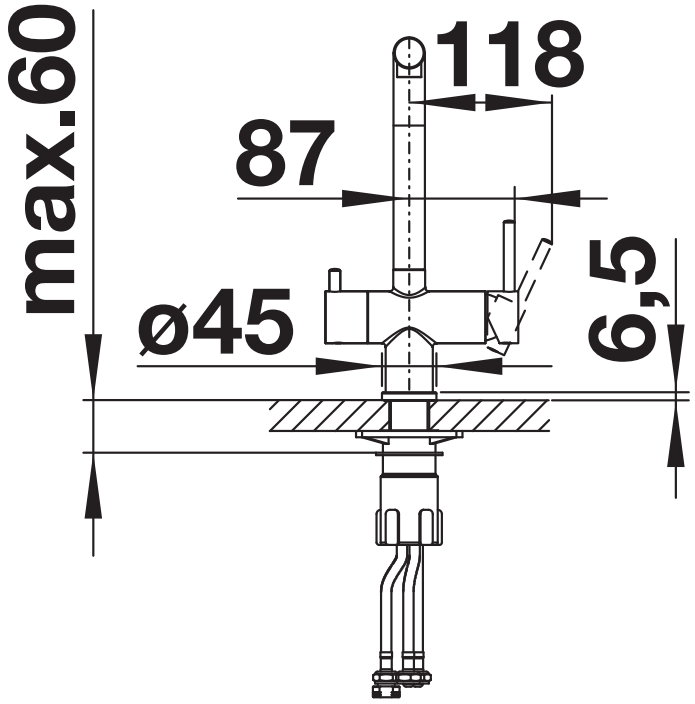

Side view lever