Product information sheet AMBIS-S

Item no. 523119

Benefits



- High-quality design in solid stainless steel, brushed finish
- Clear mixer tap design for modern kitchens
- Plenty of freedom of movement and easy to operate thanks to the high spout
- Pull-out handspray with change-over function from pearl to spray effect at the touch of a button

Colours



Available colours:
stainless steel

Stainless steel stainless steel

Scope of supply

- 130° swivel spout for greater reach
- Ø 35 mm tap hole required
- With ceramic disk cartridge
- Patented jet regulator for markedly reduced scaling
- Spray made of metal
- Nylon-sheathed spray hose
- Hose weight for reliable retraction
- Flexible connector pipes, 700 mm long and ⅜'' nut
- Stabilisation plate to increase the stability of the tap when fitted in stainless steel sinks
- With non-return valve and thus guaranteed against reflux in accordance with EN 1717

Details

Flow rate	7.8 l
Swivel range	130 °

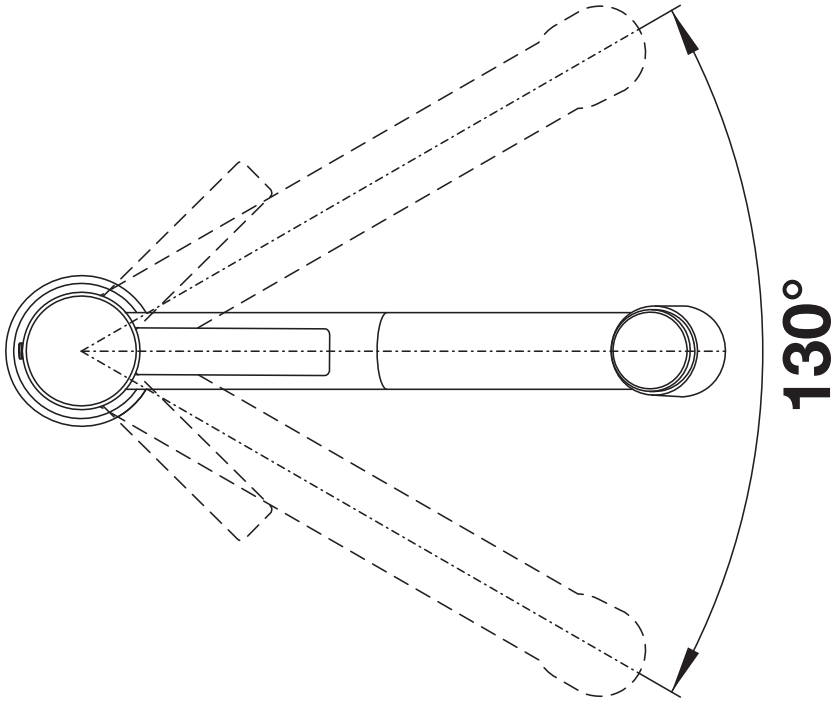

Swivel range

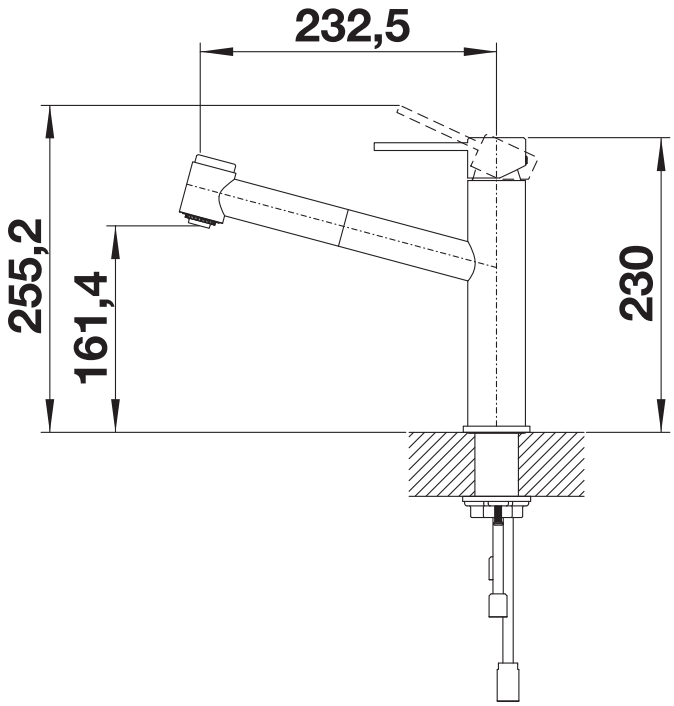

Side view

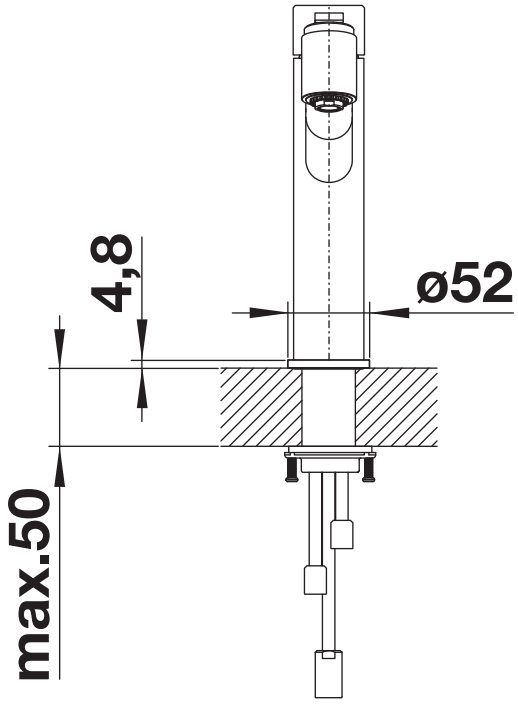

Side view lever