Product information sheet LEMIS 8 S-IF

Item no. 523037

Benefits



- Modern linear shape
- Maximum bowl capacity with two bowls
- Spacious tap ledge and drainer area
- Elegant IF flat-rim for flushmount and for installation from above
- Can be installed reversibly
- 3 ½'' basket strainer
- Version with or without remote control

Scope of supply

- waste kit with space-saving pipe
- 2 x 3 ½'' basket strainer with drain remote control (rotary switch) for 1 bowl

Details

Min cabinet size 800 mm

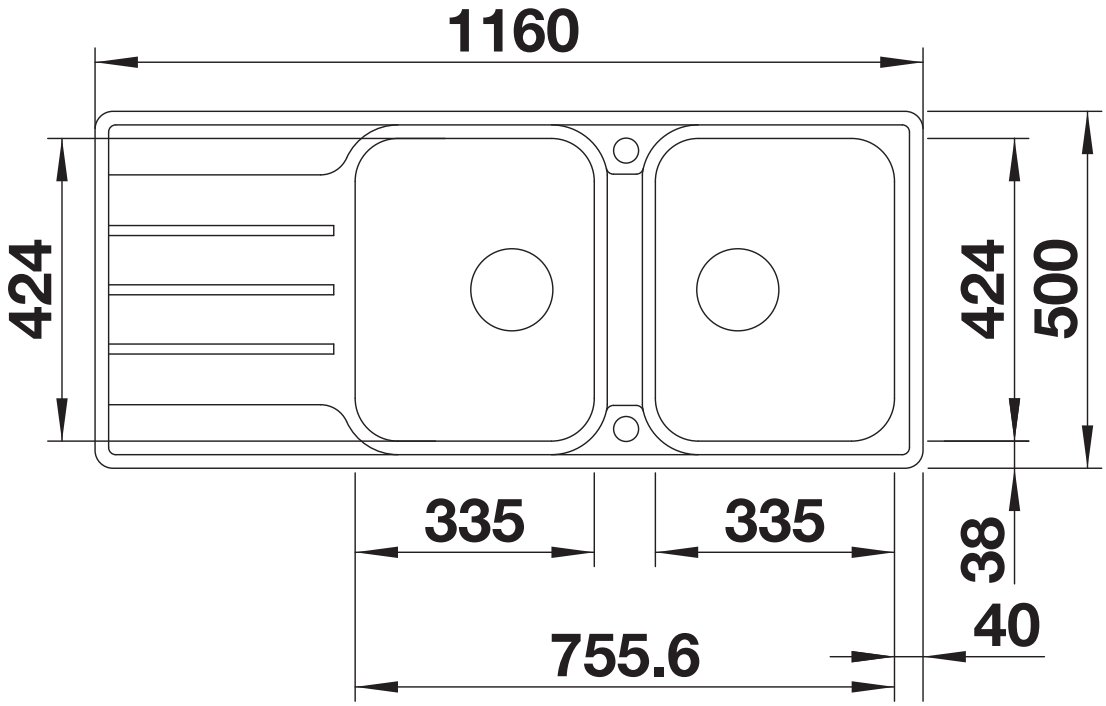

Top view

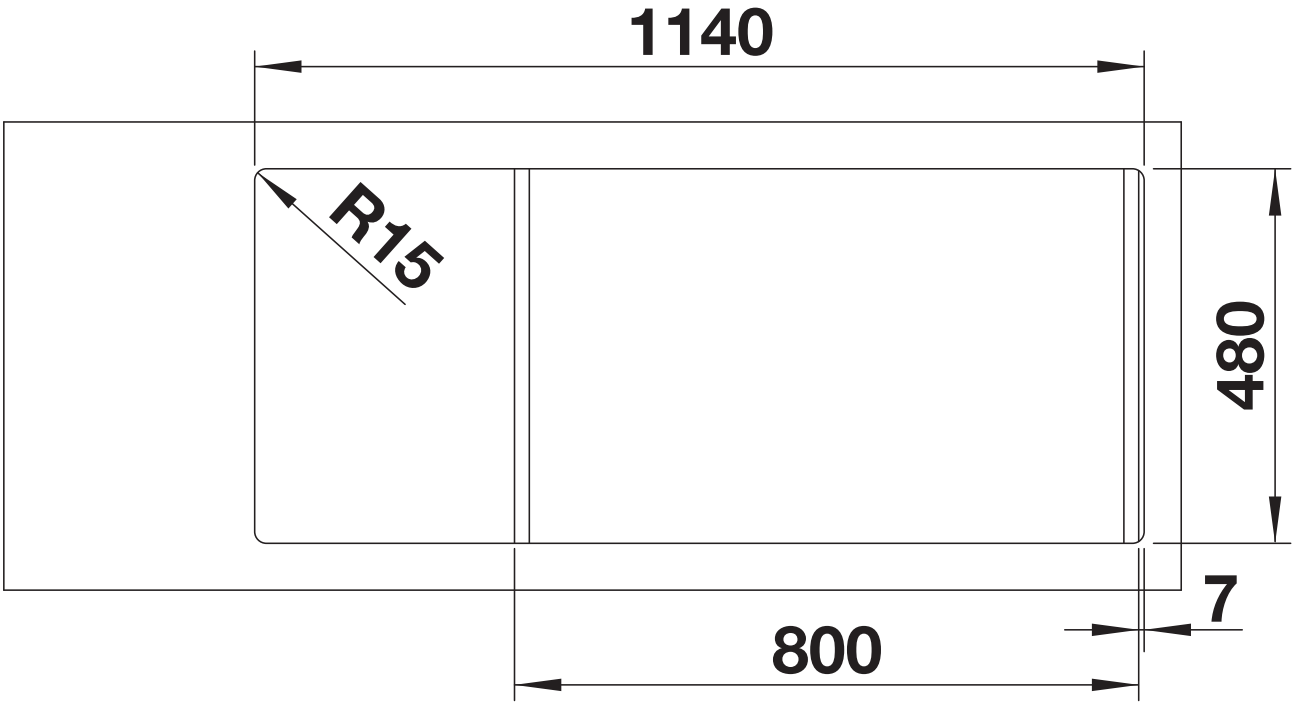

Cut-out

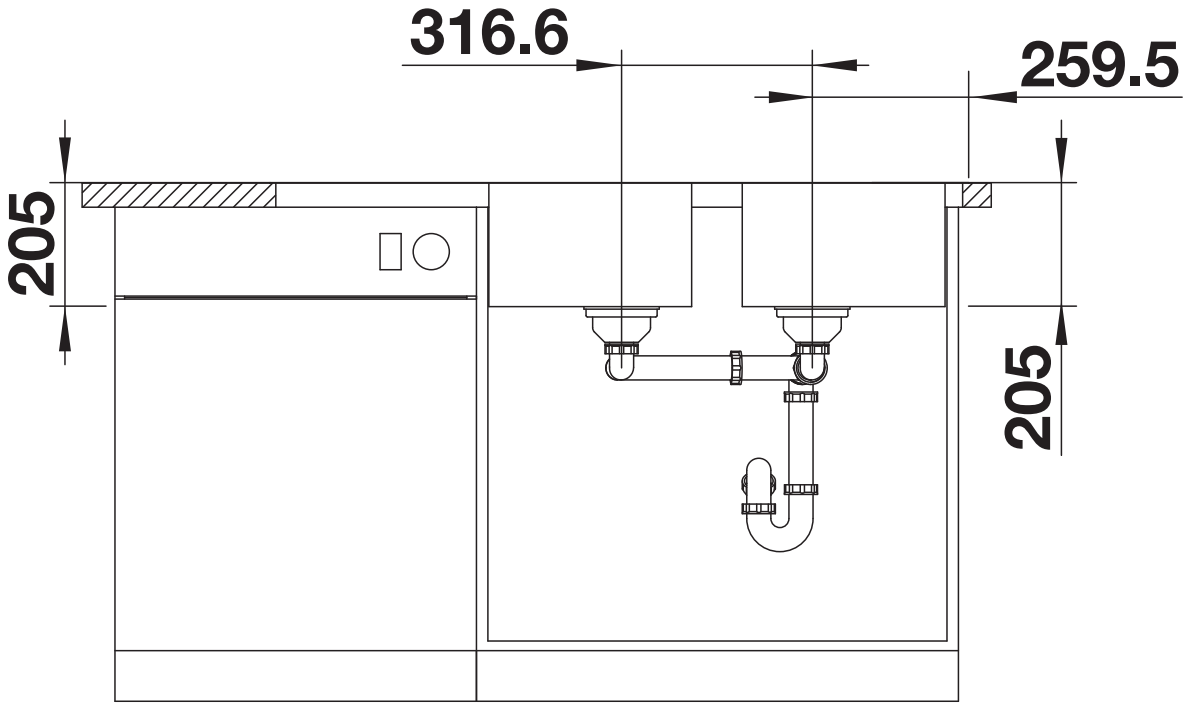

Front view

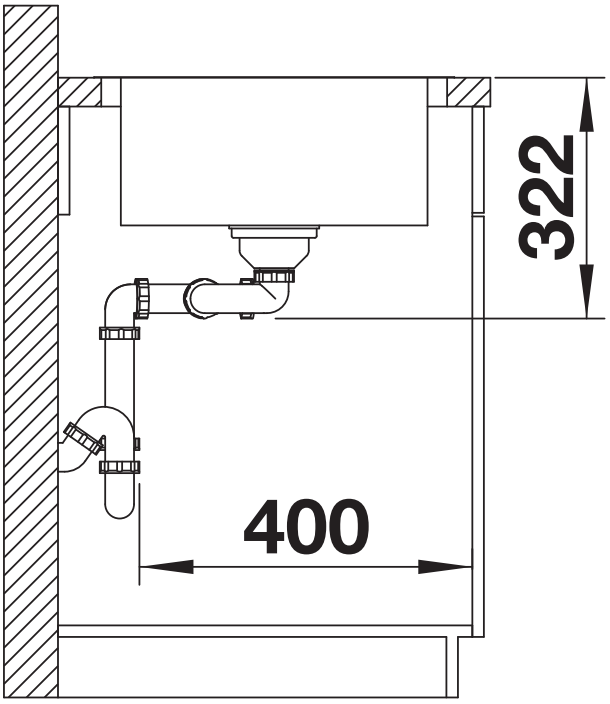

Side view