Product information sheet CARENA-S Vario

Item no. 521376

Benefits



- Modern premium mixer tap
- Covered pull-out dual-spray hose with change-over function
- High arched outlet for easy filling of pots and vases
- High positioned, ergonomic control lever
- Bi-Color - the perfect colour match for SILGRANIT sink units and bowls

Colours



brass tartufo/chrome

Available colours:

rock grey/chrome
white/chrome
tartufo/chrome
black/chrome
volcano grey/chrome
soft white/chrome
anthracite/chrome

Planning information

- Please note:
- Requires a balanced high pressure supply only, min 2.0 bar, preferred 2.0 - 2.5 bar
- ⅜'' BSP connectors required (not supplied)
- Height: 400
- Reach: 201
- Base: 50
- Tap hole: ø35
- German warehouse stock.
- Allow 10 working days.

Scope of supply

- 190° swivel spout for greater reach
- Ø 35 mm tap hole required
- With ceramic disk cartridge
- Patented jet regulator for markedly reduced scaling
- Spray made of plastic
- Hidden spray with change-over button on the back
- Nylon-sheathed spray hose
- Hose weight for reliable retraction
- Flexible connector pipes, 500 mm long and ⅜'' nut
- Stabilisation plate to increase the stability of the tap when fitted in stainless steel sinks
- With non-return valve and thus guaranteed against reflux in accordance with EN 1717

Details

Flow rate	9 l
Swivel range	190 °

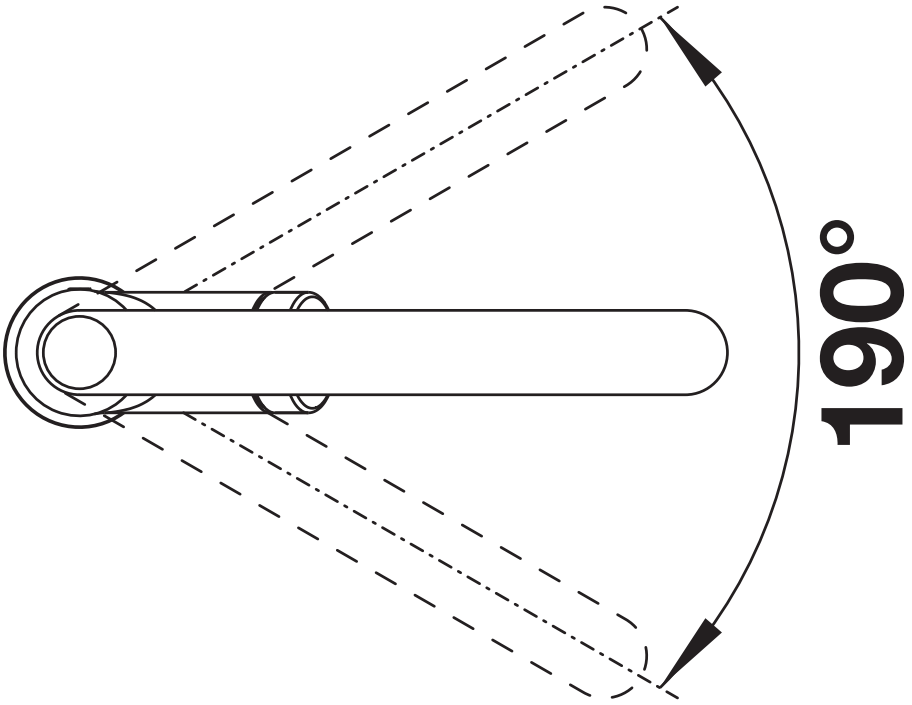

Swivel range

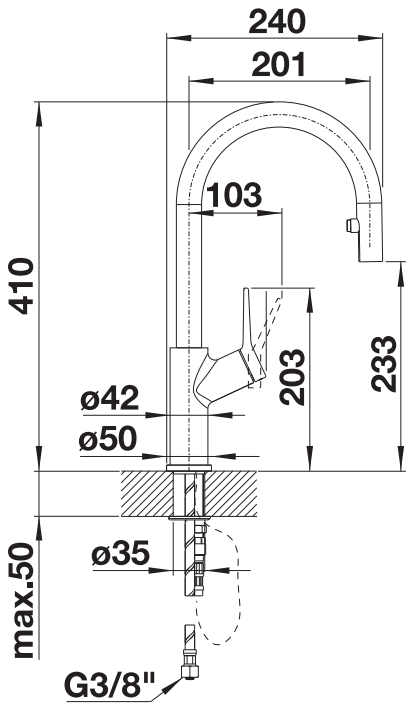

Side view

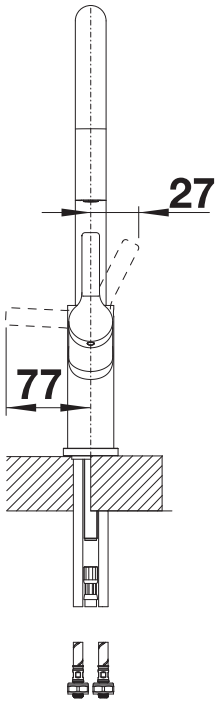

Side view lever