# Product information sheet LANTOS 45 S-IF

Item no. 519717

## Benefits



- Wide sink family range with clear shapes
- Elegant IF flat-rim for flushmount and for installation from above
- Drainer with additional overflow
- Can be installed reversibly
- With 3 ½'' stainless steel basket strainer

## Scope of supply

- waste kit with space-saving pipe
- 3 ½'' basket strainer with drain remote control (rotary switch)

## Details

| | |
|---|---|
| Min cabinet size | 450 mm |

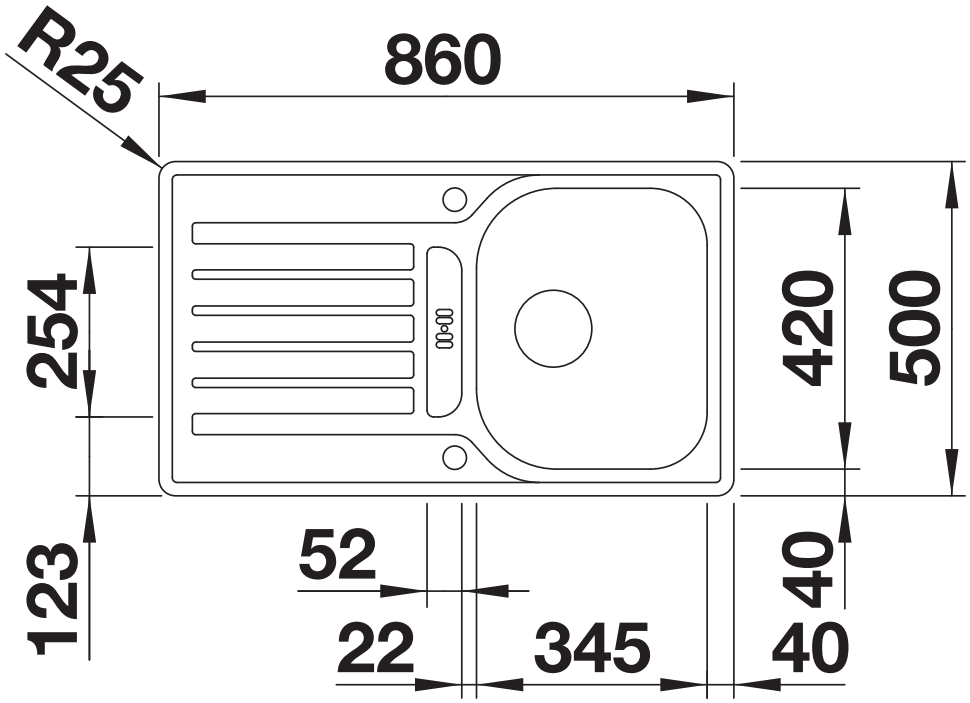


Top view

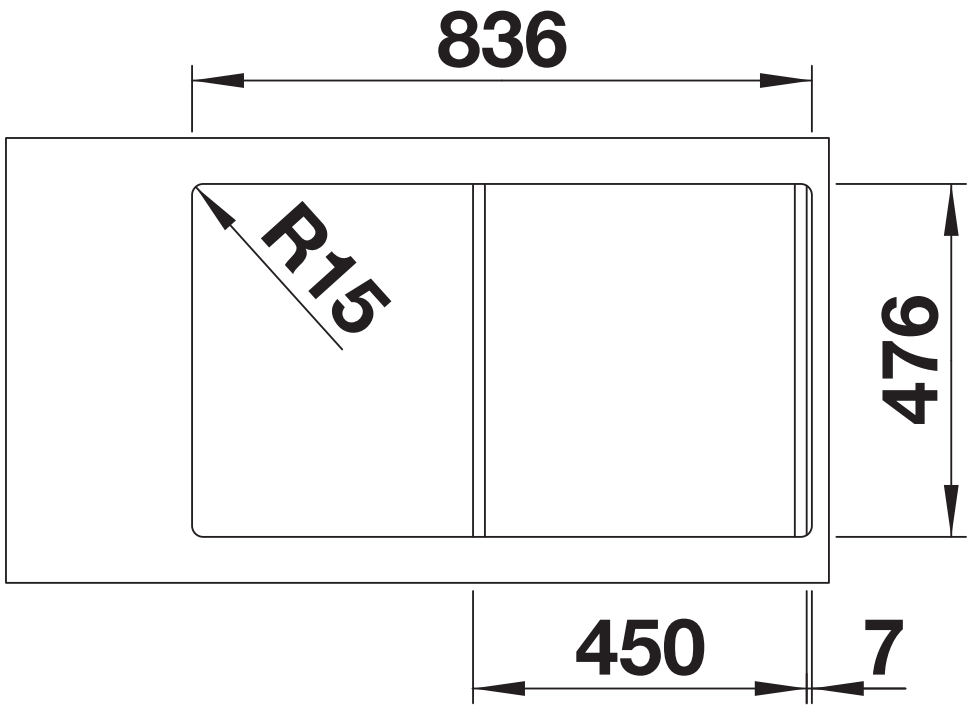


Cut-out

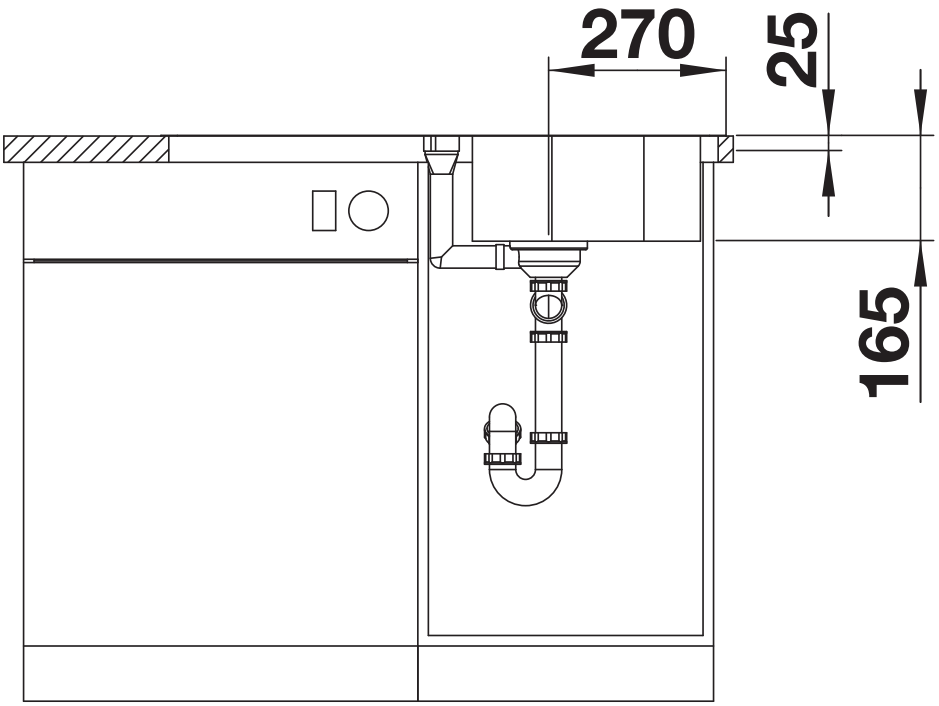


Front view

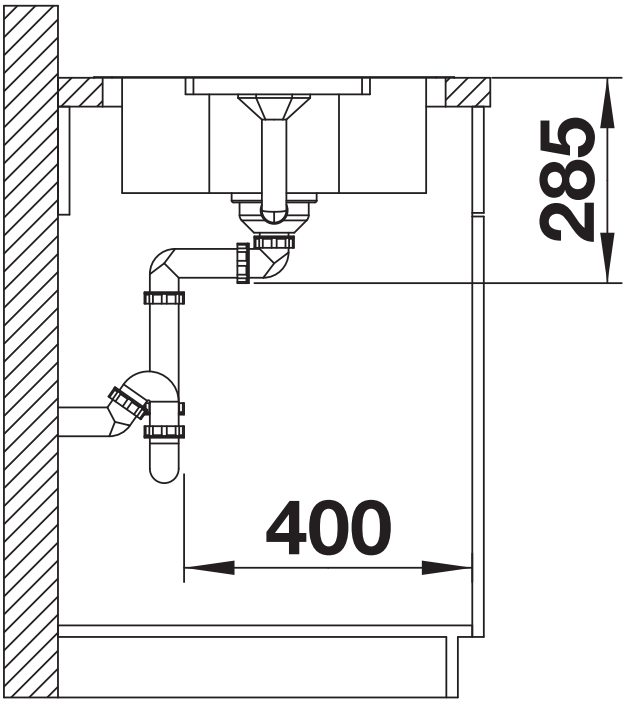


Side view