Product information sheet LANTOS 8 S-IF Compact

Item no. 519713

Benefits



- Wide sink family range with clear shapes
- Elegant IF flat-rim for flushmount and for installation from above
- Two large bowls maximize the cabinet used space
- Can be installed reversibly
- With 3 ½'' stainless steel basket strainer

Scope of supply

- waste kit with space-saving pipe
- 2 x 3 ½'' basket strainer with drain remote control (rotary switch) for 1 bowl

Details

Min cabinet size	800 mm

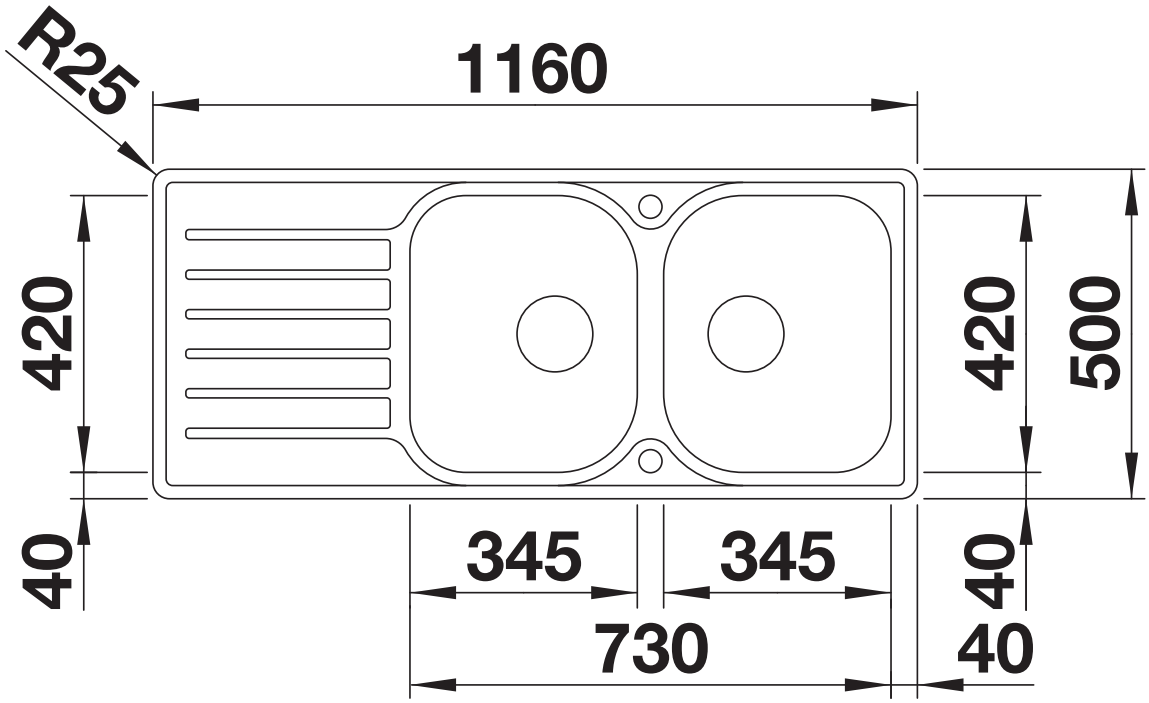

Top view

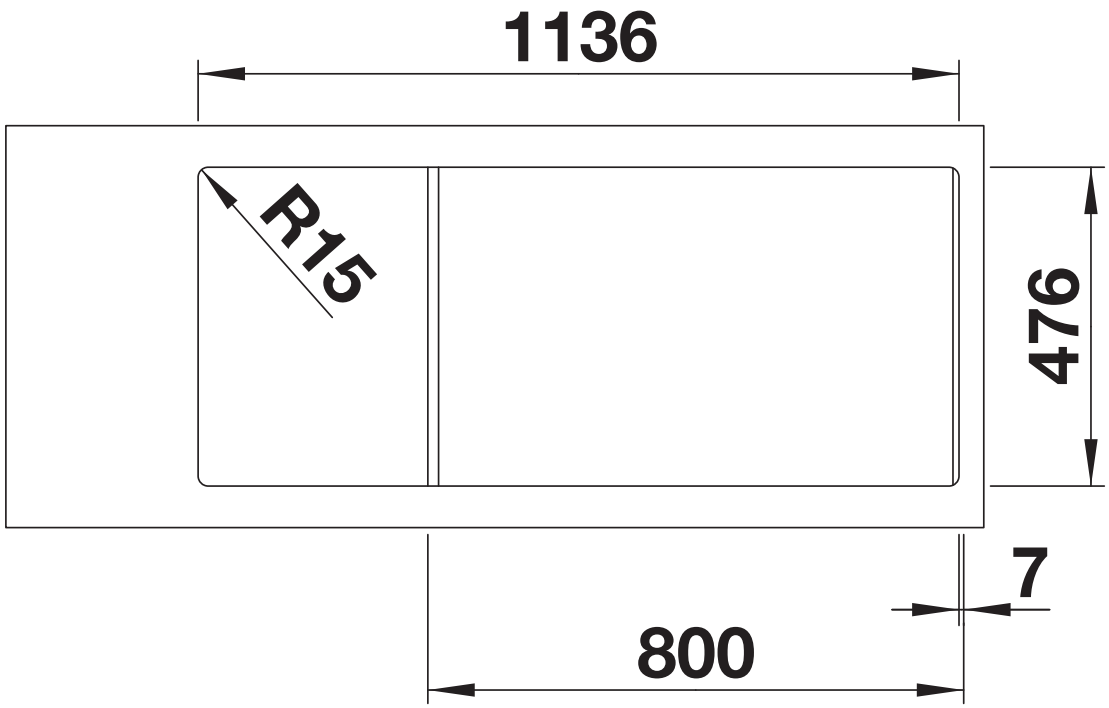

Cut-out

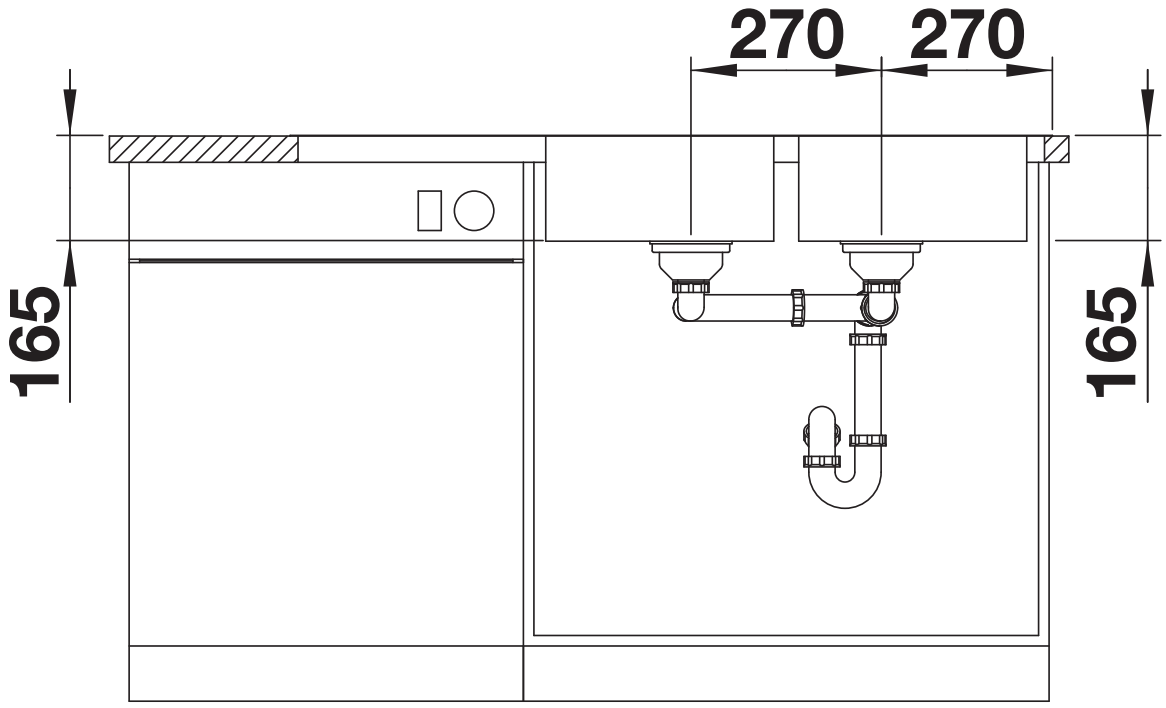

Front view

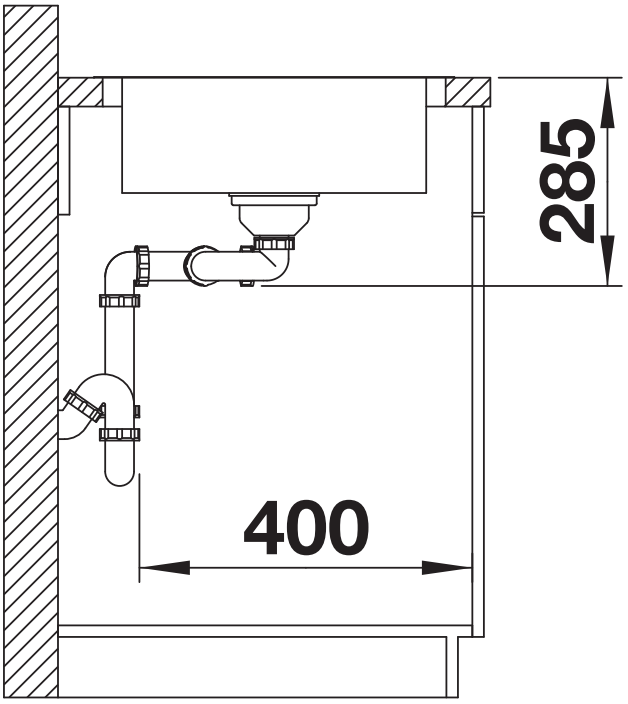

Side view