Product information sheet LANTOS 45 S-IF Salto

Item no. 519707

Benefits



- Wide sink family range with clear shapes
- Elegant IF flat-rim for flushmount and for installation from above
- Can be installed reversibly
- With 3 ½'' stainless steel basket strainer

Scope of supply

- waste kit with space-saving pipe
- 3 ½'' basket strainer with drain remote control (rotary switch)

Details

Min cabinet size	450 mm

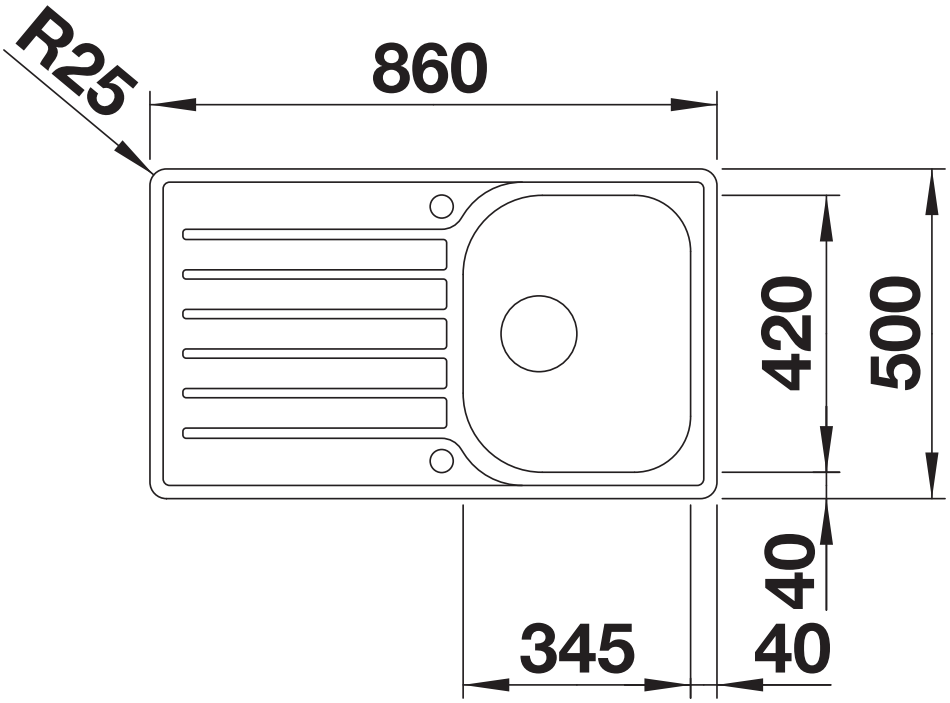

Top view

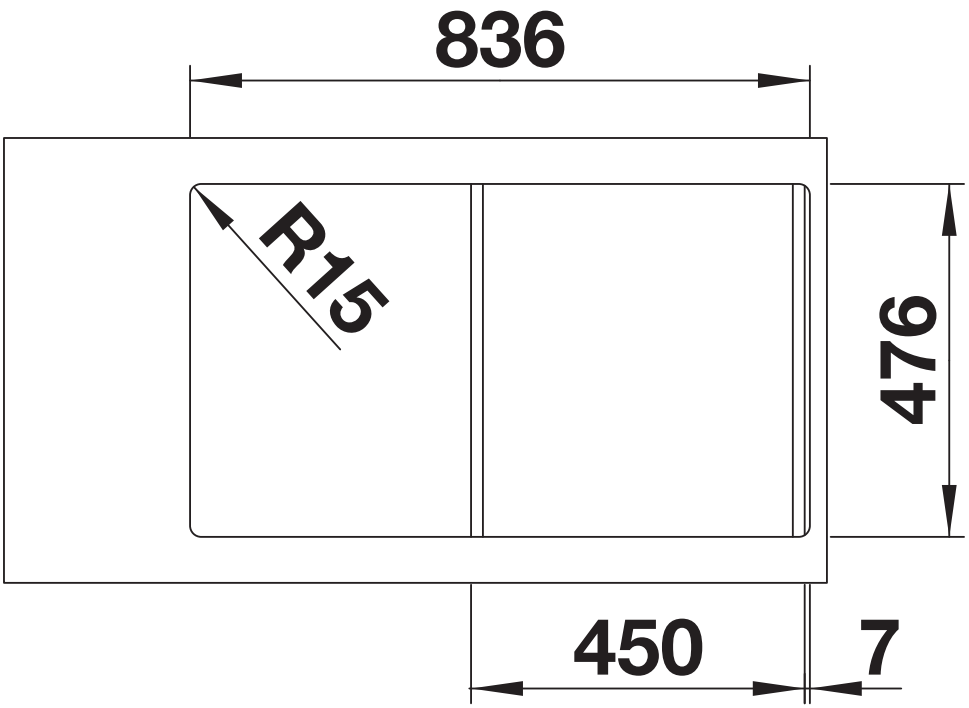

Cut-out

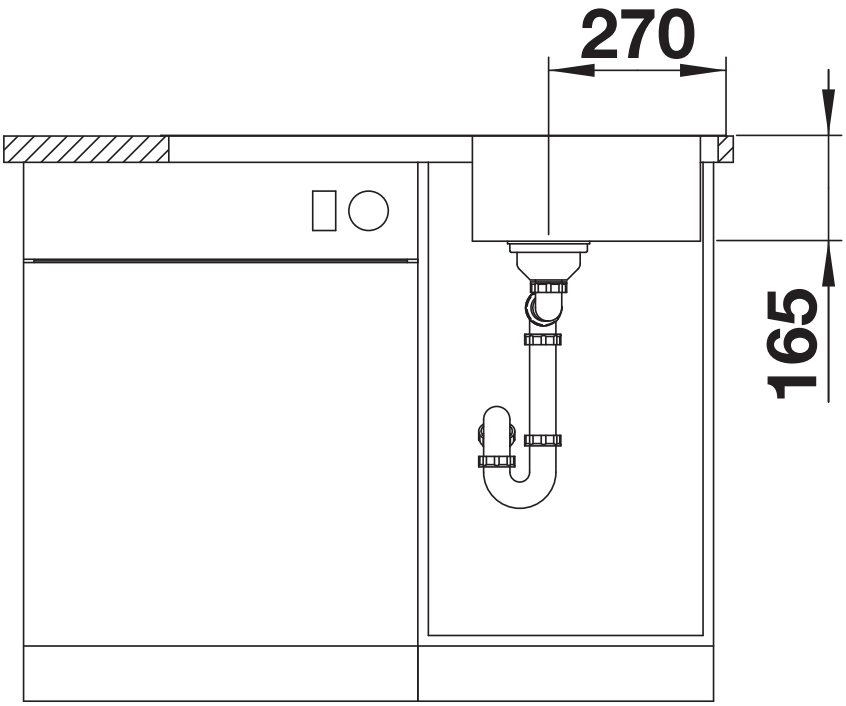

Front view

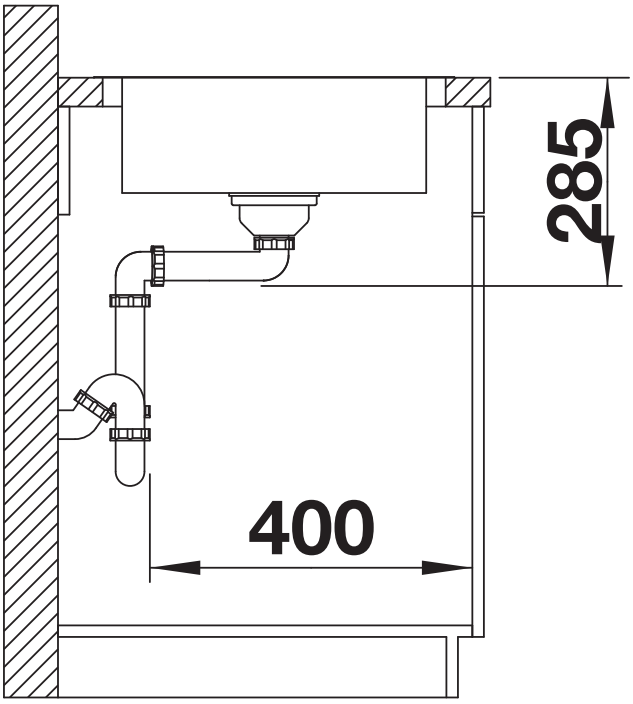

Side view