Product information sheet NAYA 8 S

Item no. 519660

Benefits



- Generous bowl for multiple works in and around the sink
- Soft internal corners in the bowl for easy cleaning
- Mindful shape that integrates nicely within the kitchen design
- Continuous ledge frames the water area and protects the worktop from water splashes

Colours



Available colours:

coffee
anthracite
rock grey
white
black
soft white
volcano grey
tartufo

SILGRANIT tartufo

Scope of supply

- waste kit with space-saving pipe
- 2 x 3 ½'' basket strainer

Details

Min cabinet size	800 mm

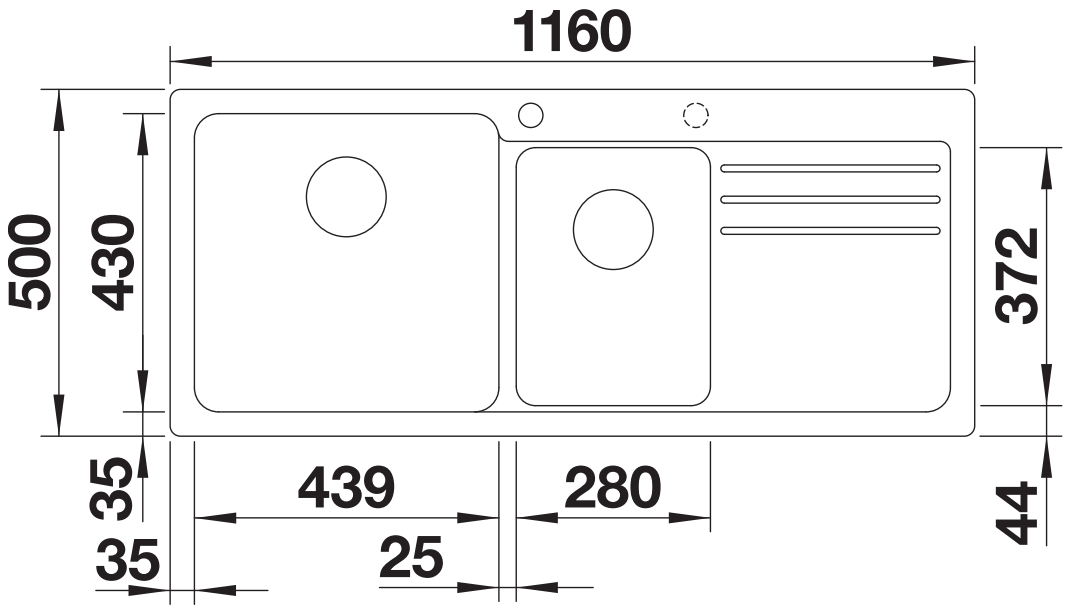

Top view

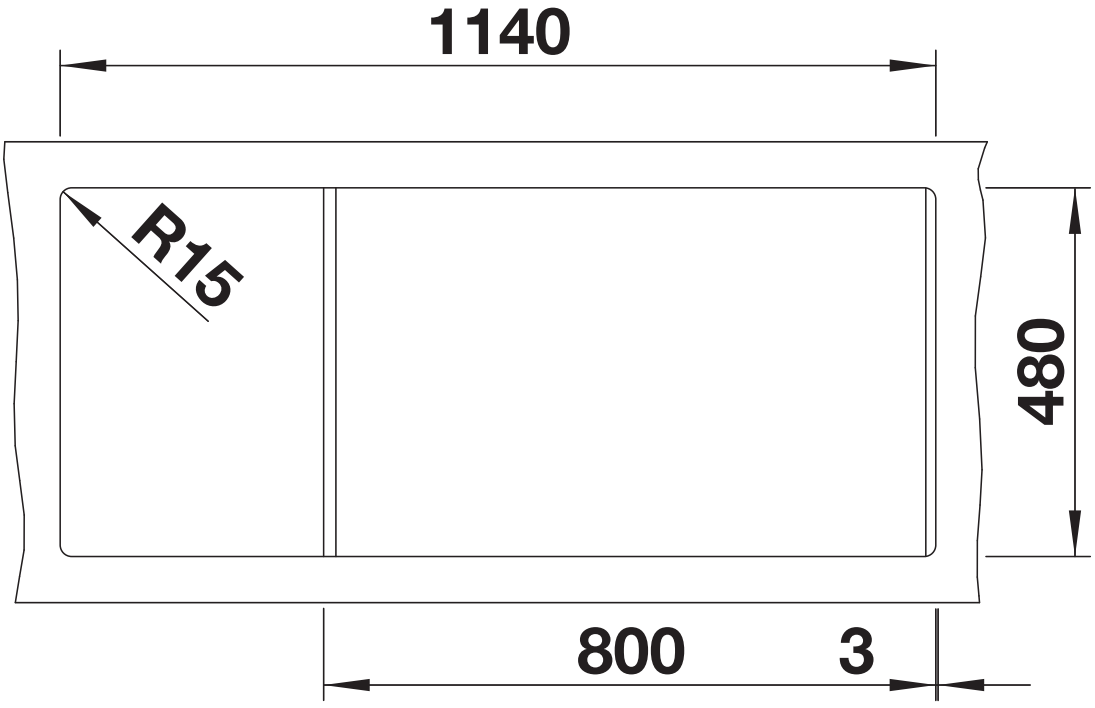

Cut-out

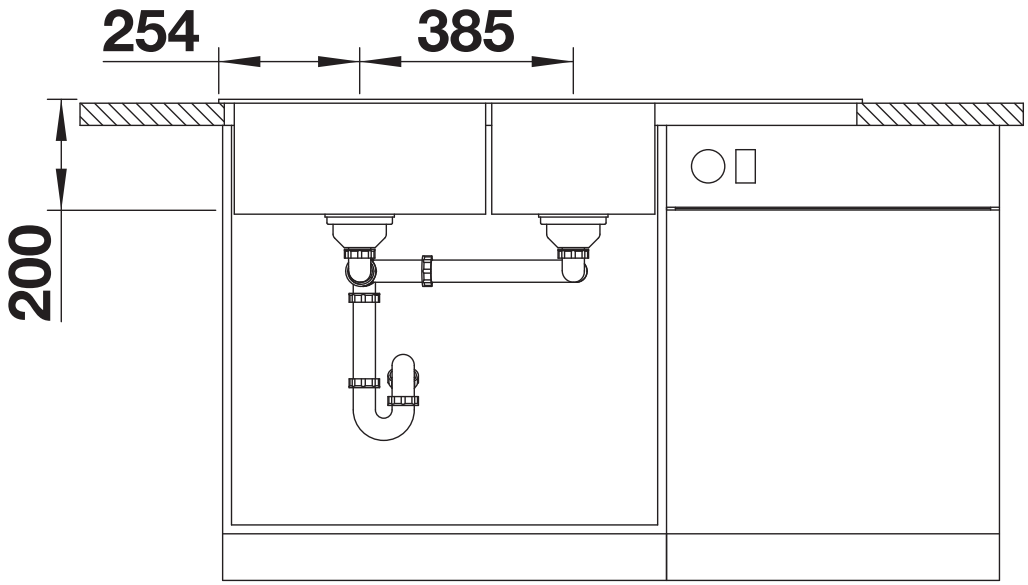

Front view

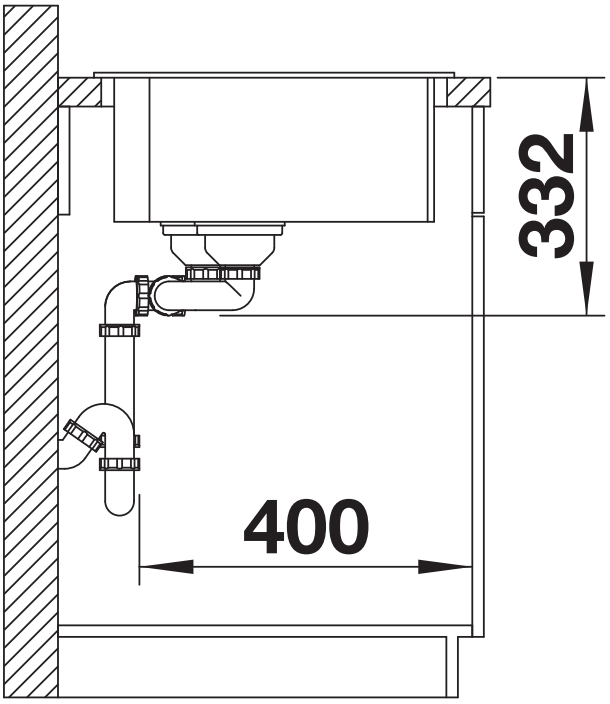

Side view