Product information sheet METRA 9

Item no. 518886

Benefits



- Young, straight-lined design
- The large capacity of the bowl provides generous room to do the washing up
- Large tap ledge for installation of mixer tap and soap dispenser

Colours



Available colours:

anthracite
rock grey
white
tartufo
coffee
black
soft white
volcano grey

SILGRANIT rock grey

Planning information

- Cut out size: 840 x 480
- Universal handing
- German warehouse stock.
- Allow 10 working days.

Scope of supply

- waste kit with space-saving pipe
- 2 x 3 ½'' basket strainer

Details

Min cabinet size 900 mm

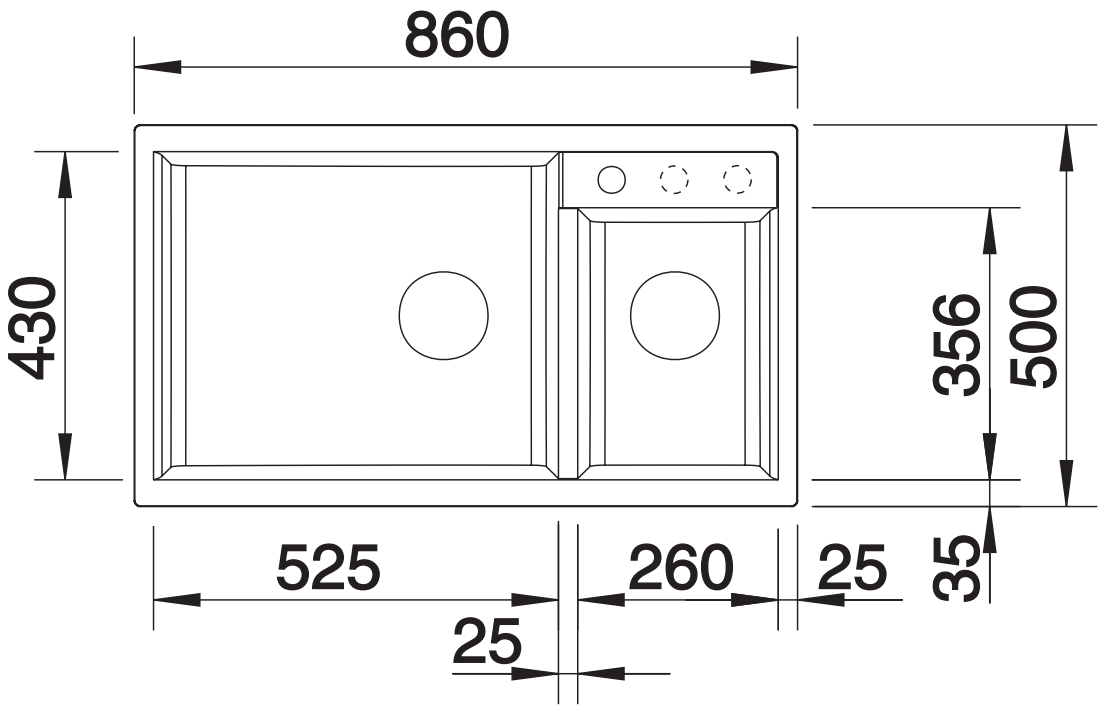

Top view

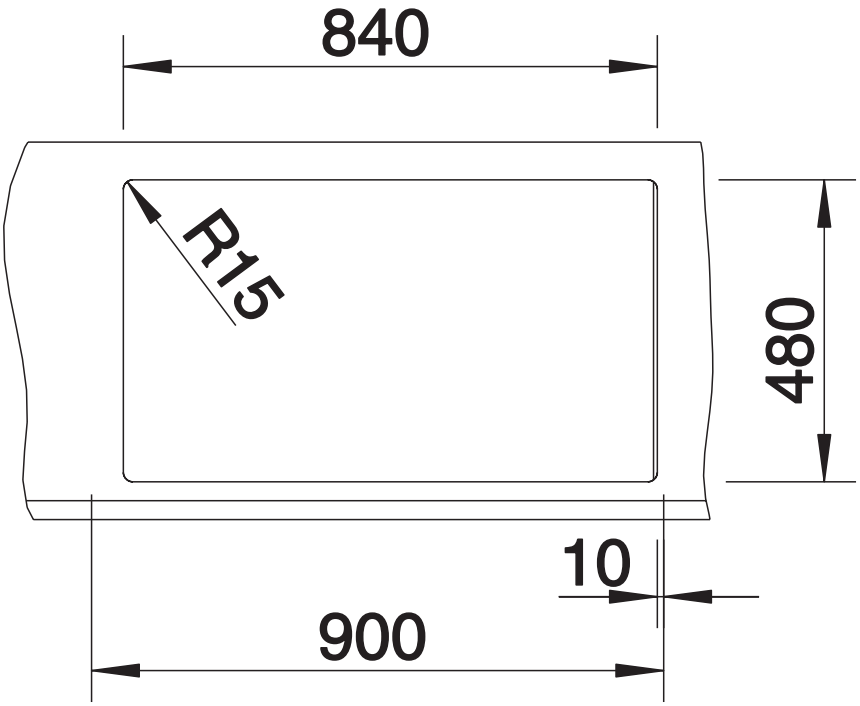

Cut-out

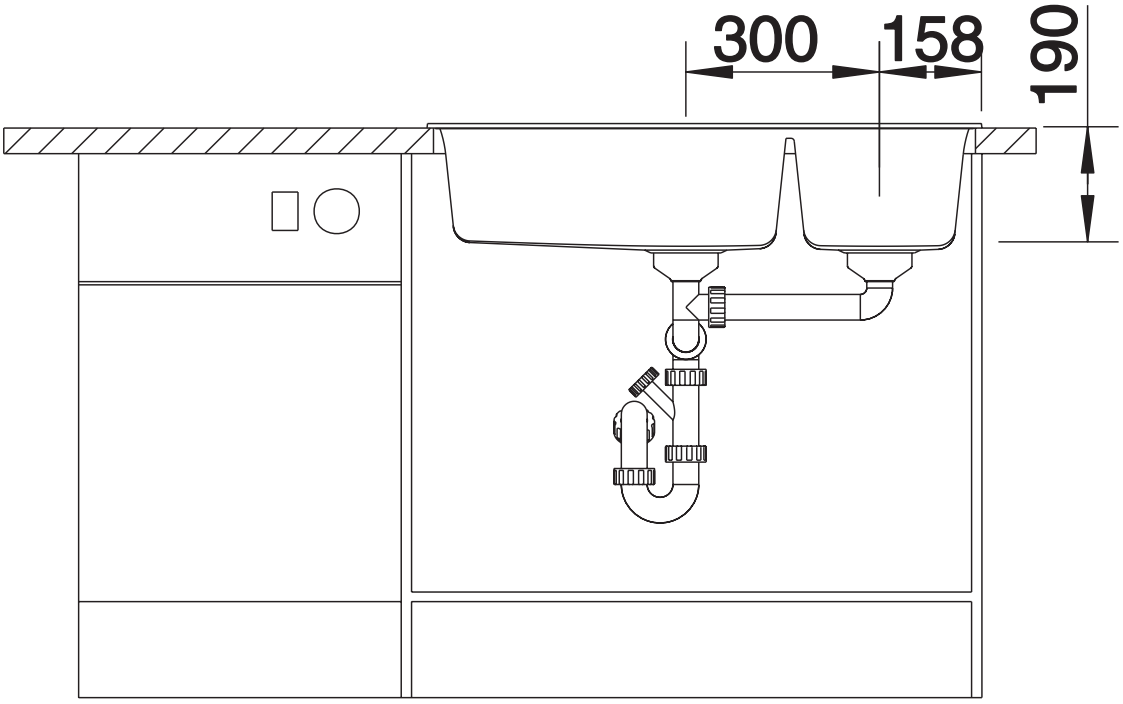

Front view

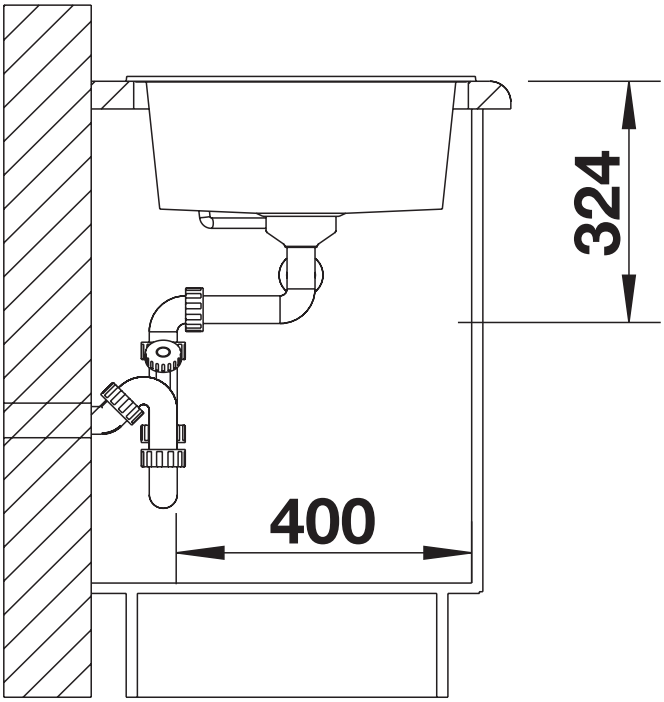

Side view