Product information sheet LINUS-S

Item no. 518813

Benefits



- Minimalist design
- Extendable spray head
- High quality metal spray
- High spout for easy filling of pans and vases
- Design and colour of tap and coloured sink are a perfect match

Colours



brass rock grey

Available colours:

black
anthracite
rock grey
volcano grey
white
soft white
tartufo
coffee

Planning information

- Please note:
- High pressure supply only - requires minimum of 1.0 bar pressure (approx 10 metre head), preferred 1.0-1.5 bar
- ⅜'' BSP connectors required (not supplied)
- Heavy duty metal tap stabilising bracket, fit when required. Item No. 450775
- Height: 284
- Reach: 219
- Base: 45
- Tap hole: ø35

Scope of supply

- 140° swivel spout for greater reach
- Ø 35 mm tap hole required
- With ceramic disk cartridge
- Patented jet regulator for markedly reduced scaling
- Spray made of metal
- Metal-sheathed spray hose
- BLANCO hose weight for extended reach
- Flexible connector pipes, 700 mm long and ⅜'' nut
- Stabilisation plate to increase the stability of the tap when fitted in stainless steel sinks
- With non-return valve and thus guaranteed against reflux in accordance with EN 1717

Details

Flow rate	10 l
Swivel range	140 °

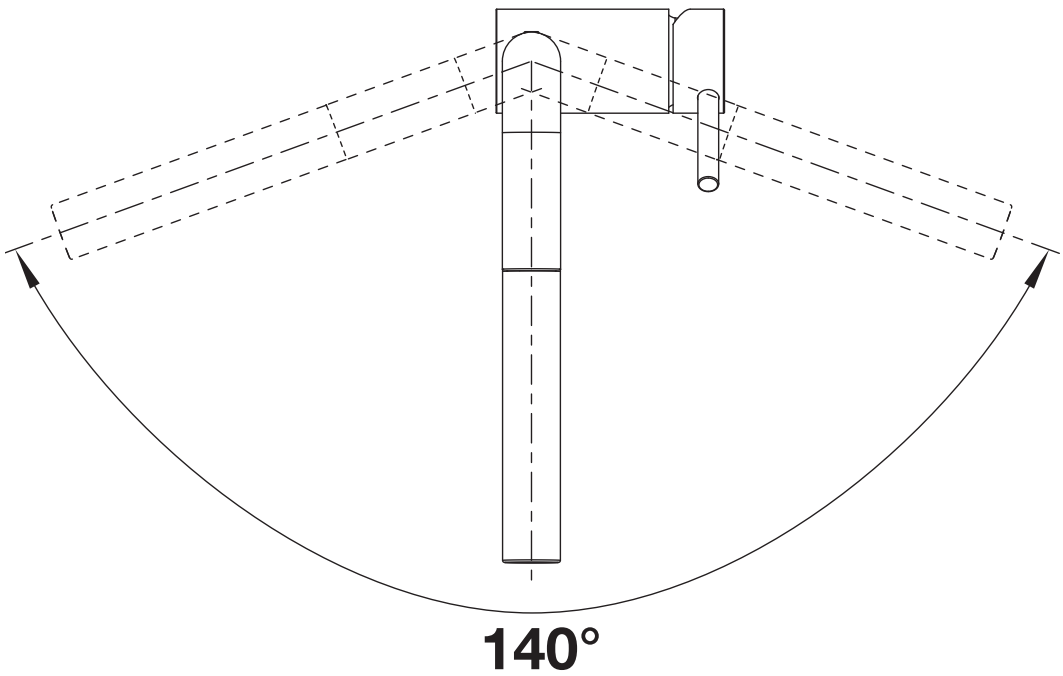

Swivel range

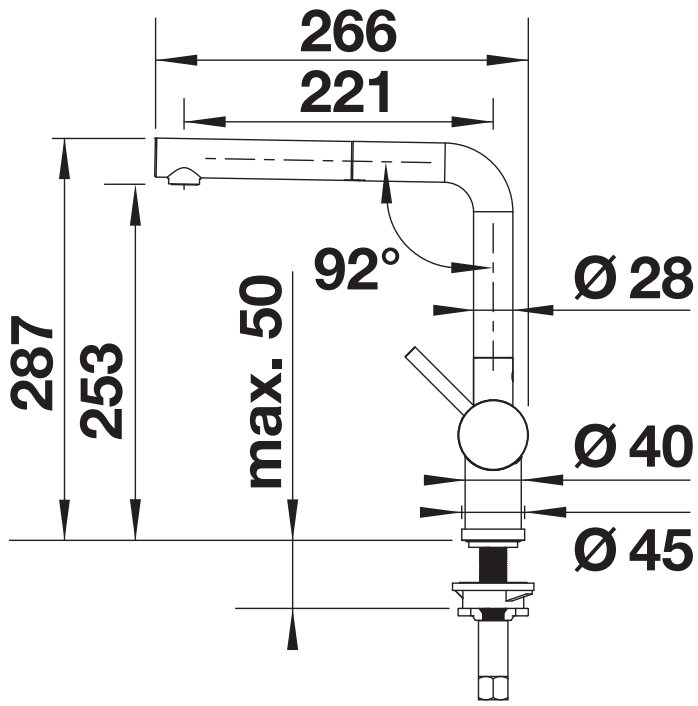

Side view

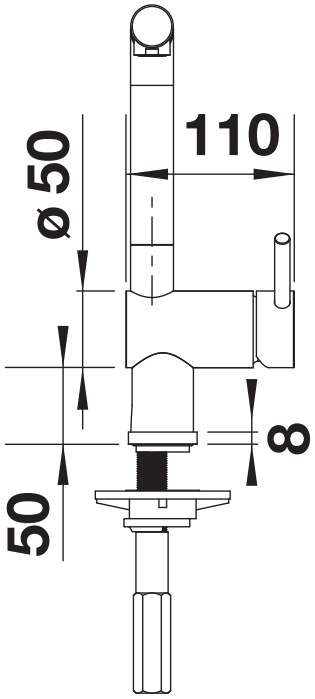

Side view lever