Product information sheet METRA XL 6 S

Item no. 517359

Benefits



- Young, straight-lined design
- The large capacity of the bowl provides generous room to do the washing up
- Spacious draining area provides a high degree of comfort
- Can be installed reversibly

Colours



Available colours:

white
anthracite
coffee
tartufo
rock grey
black
soft white
volcano grey

SILGRANIT tartufo

Scope of supply

- waste kit with space-saving pipe
- 3 ½'' basket strainer

Details

Min cabinet size 600 mm

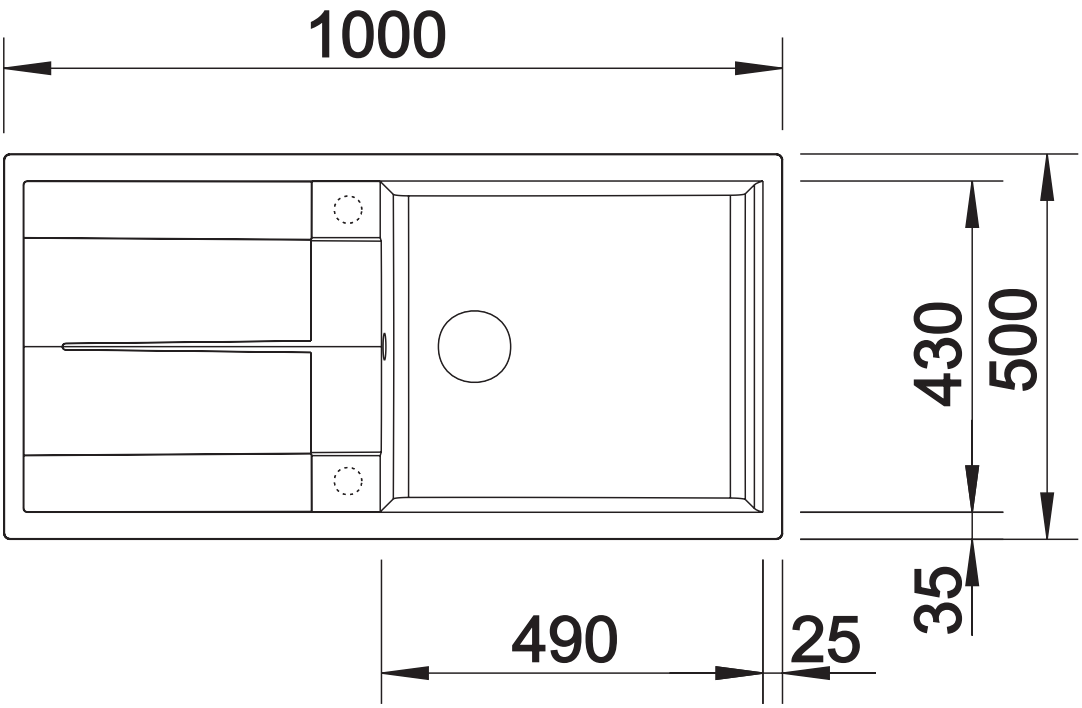

Top view

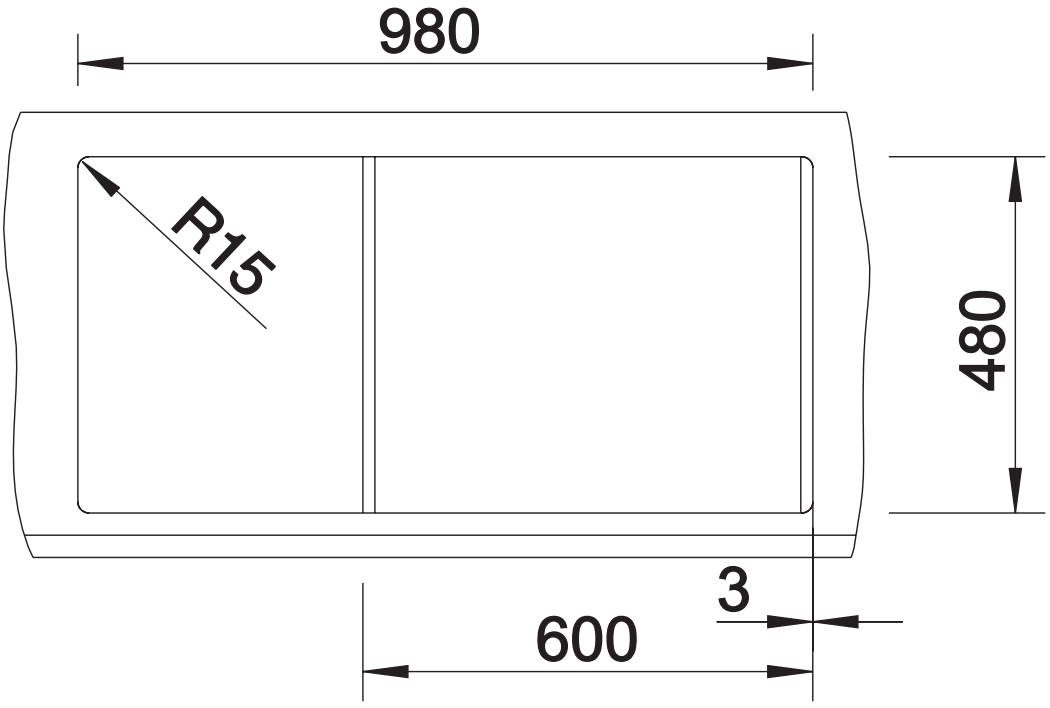

Cut-out

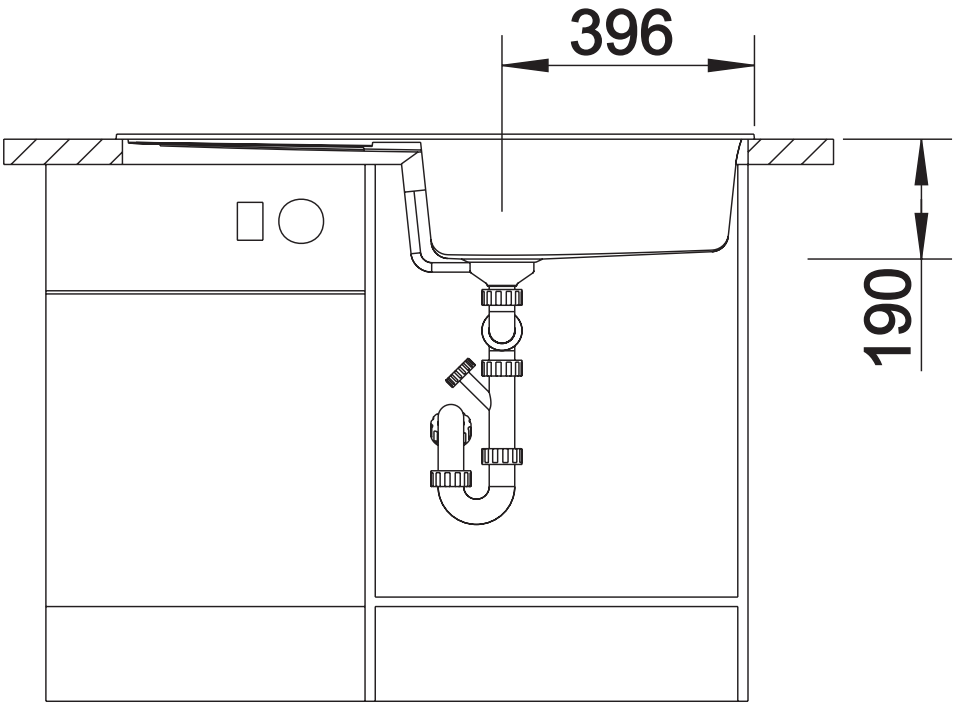

Front view

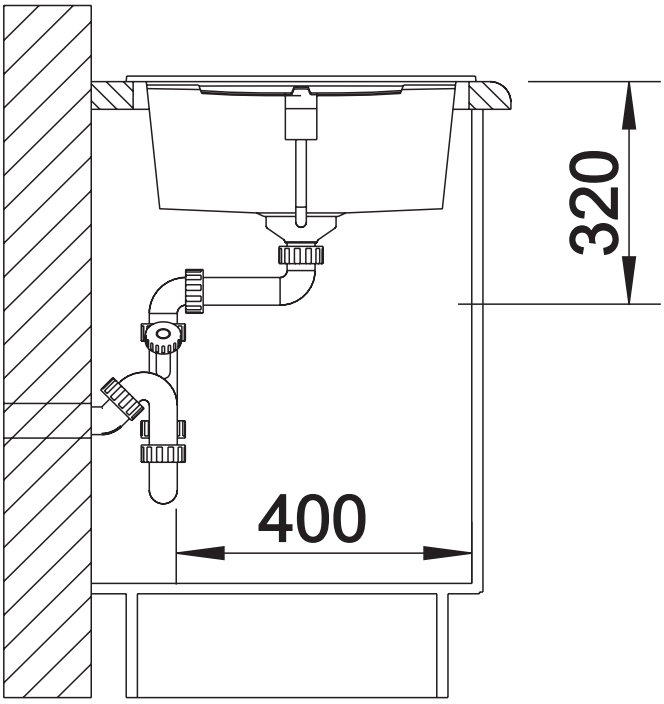

Side view