Product information sheet PANOR 60

Item no. 514486

Benefits



- Attractive solution for traditional and modern country home styles
- Elegant combination of radii
- Particularly voluminous bowl
- Elegant in crystal white
- Suitable for 60 cm sink cabinets

Colours



Ceramic crystal white glossy

Available colours:
crystal white glossy

Planning information

- Hole for kitchen mixer tap provided. A hole is provided for optional accessories (to be broken through on site). Rear side is not glazed.
- See our online product catalogue for installation instructions.

Scope of supply

- waste kit with space-saving pipe
- 3 ½'' basket strainer
- 1 hole

Details

Min cabinet size 600 mm

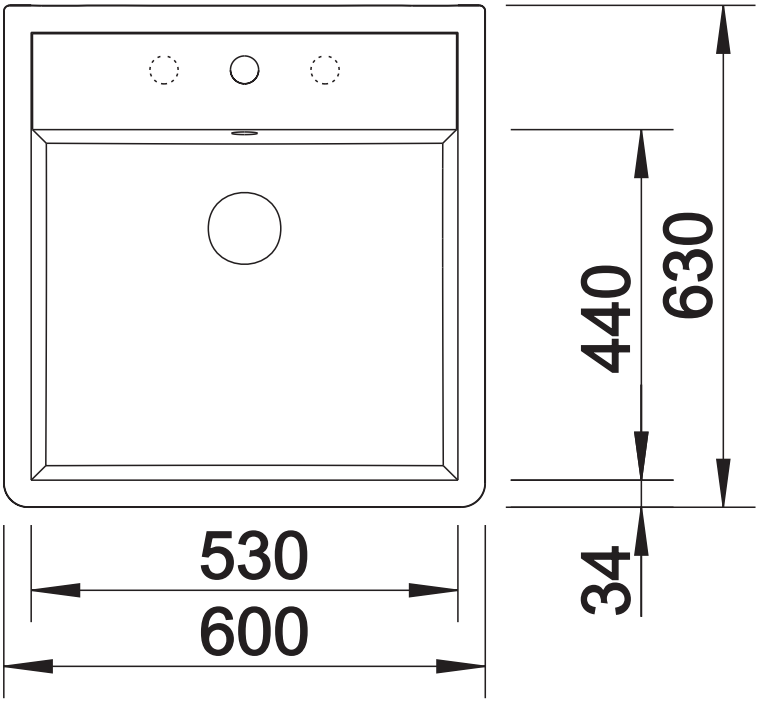

Top view

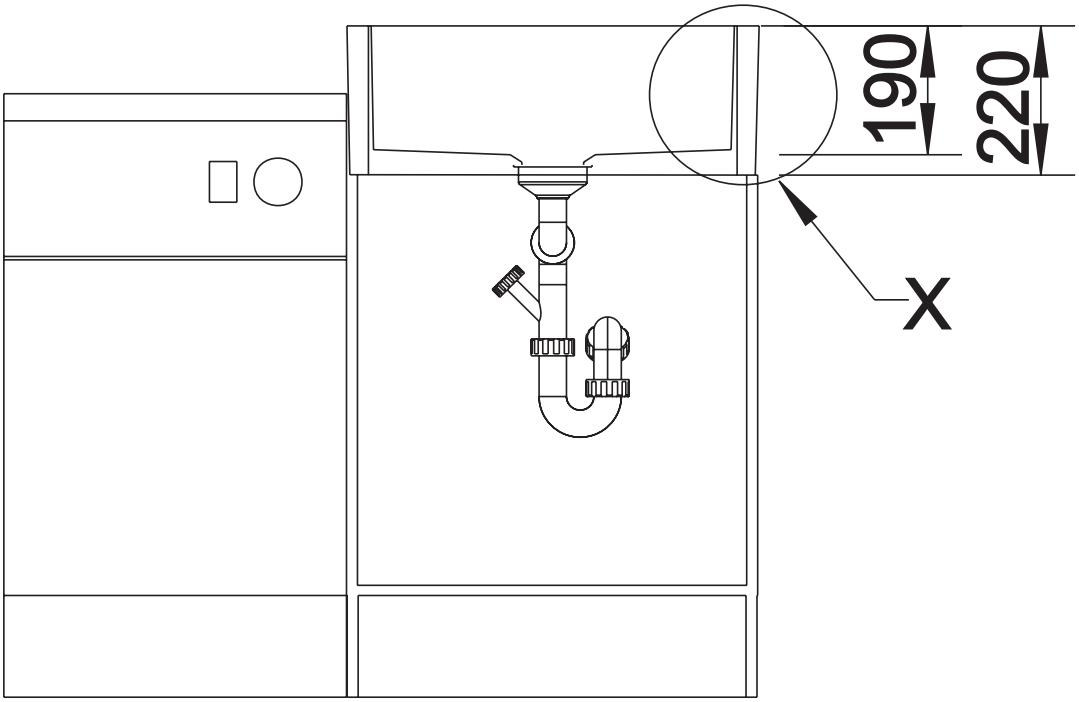

Front view

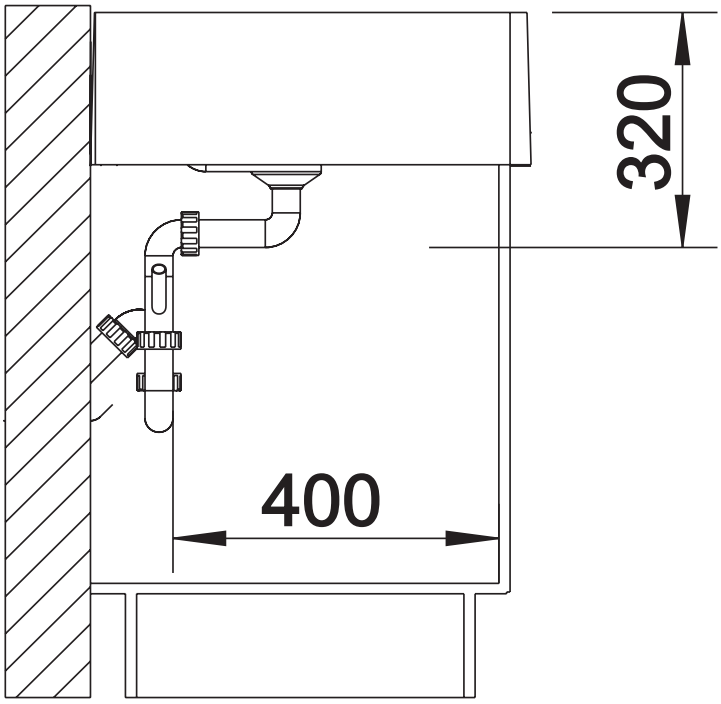

Side view