Product information sheet LINUS-S-F

Item no. 514276

Benefits



- Suitable for installation beneath window
- Minimalist design
- Simple to operate: lift straight up and lay on one side
- High spout for easy filling of pans and vases
- Extendable spray head
- Minimum clearance between sink and window sash 4.5 cm

Colours



brass chrome

Available colours:
chrome

Planning information

- *Minimum clearance between sink and window sash 4.5 cm.

Scope of supply

- 140° swivel spout for greater reach
- Ø 35 mm tap hole required
- With ceramic disk cartridge
- Spray made of metal
- Metal-sheathed spray hose
- BLANCO hose weight for extended reach
- Flexible connector pipes, 950 mm long and ⅜'' nut
- Stabilisation plate to increase the stability of the tap when fitted in stainless steel sinks
- With non-return valve and thus guaranteed against reflux in accordance with EN 1717

Details

Flow rate	5 l
Swivel range	140 °

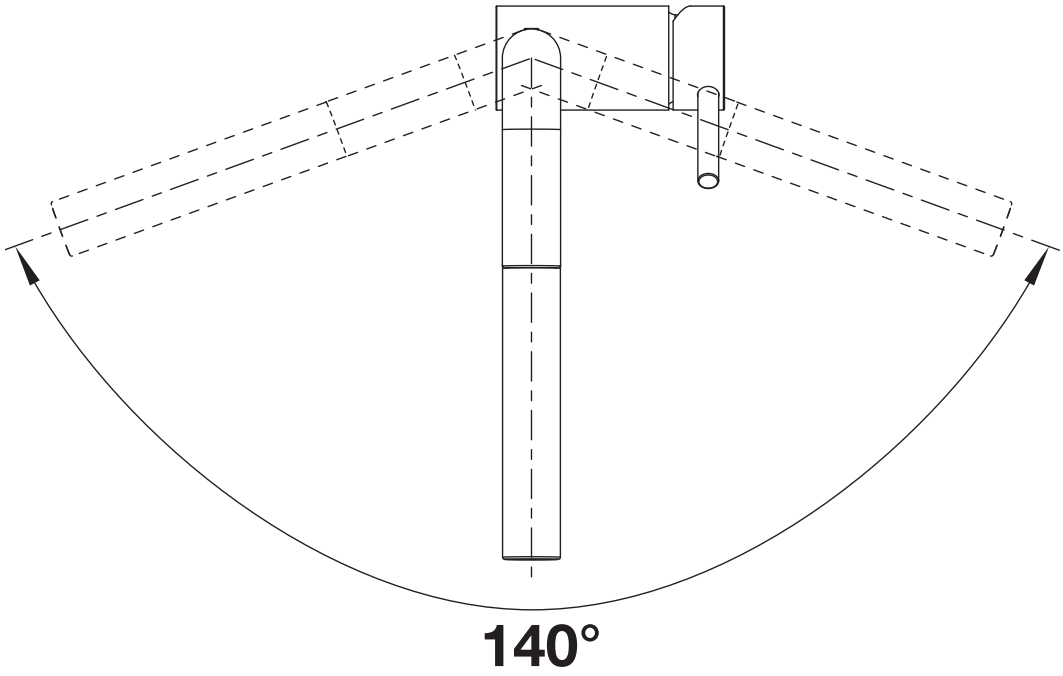

Swivel range

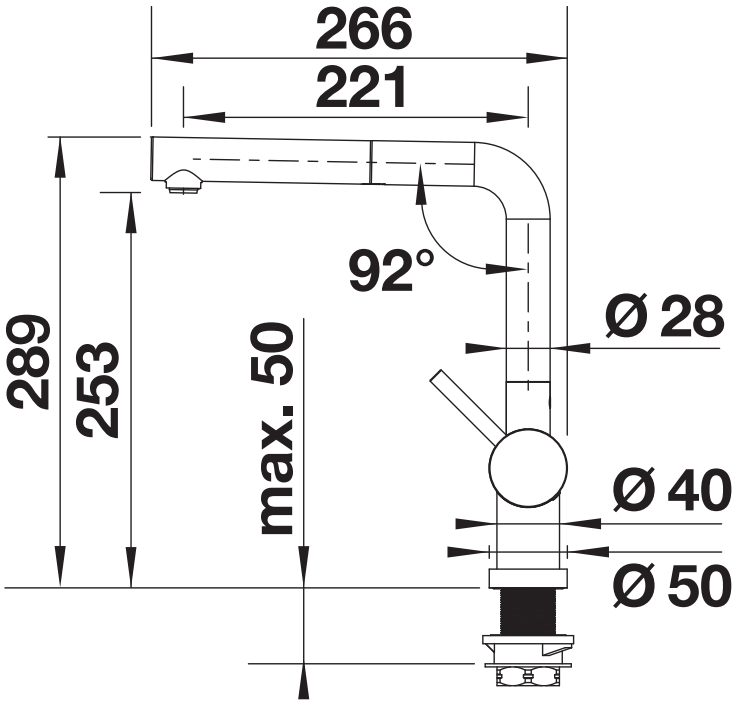

Side view

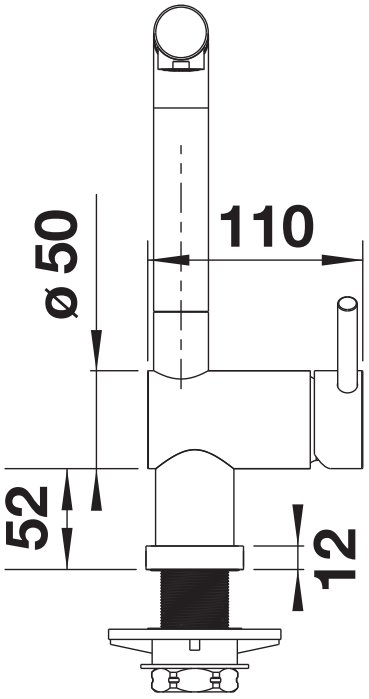

Side view lever