Product information sheet PLENTA 9

Item no. 514029

Benefits



- Extra big single bowl with optimum use of volume
- Flexible accessory components provide maximum functionality
- The accessories can be freely combined and placed in the sink, are compact and room saving stackable
- Spacious tap ledge with a lot of room for e.g. soap dispenser, washing up utensils etc.

Scope of supply

- waste kit with space-saving pipe
- 3 ½'' basket strainer
- seal

Details

Min cabinet size 900 mm

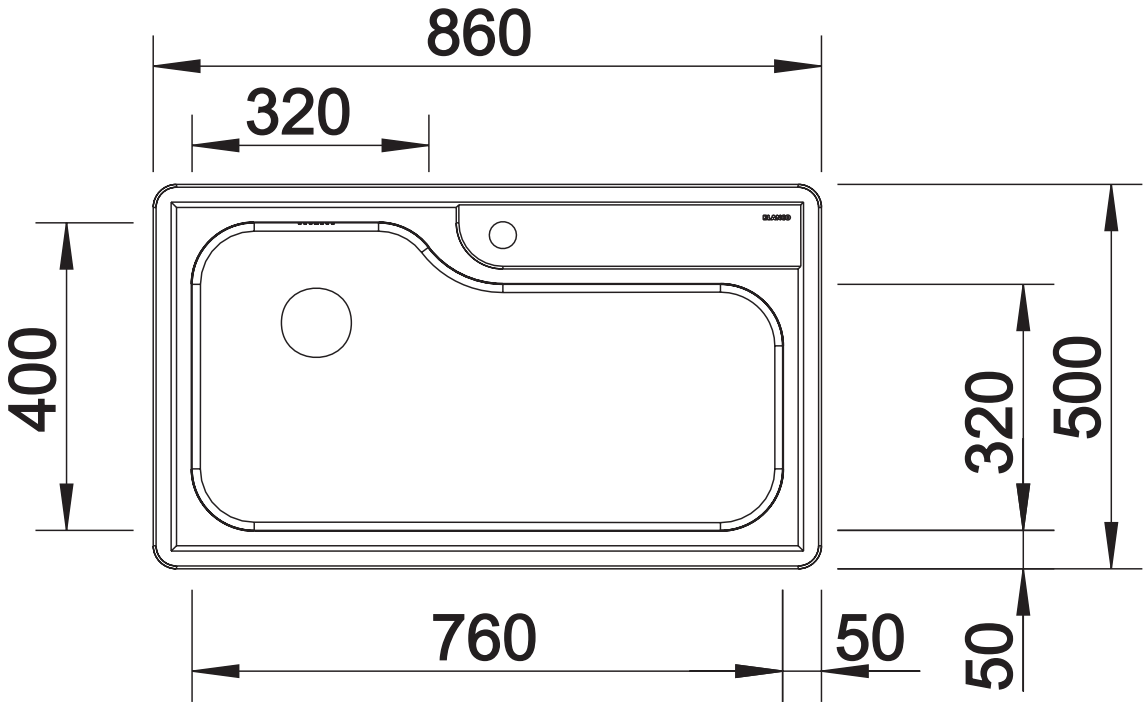

Top view

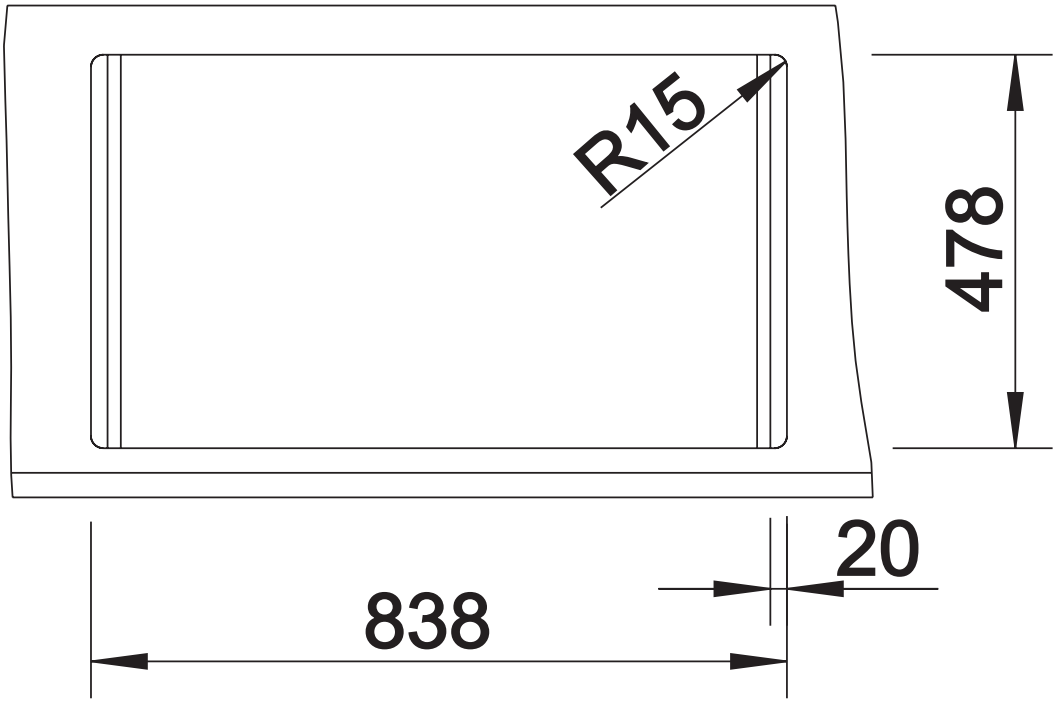

Cut-out

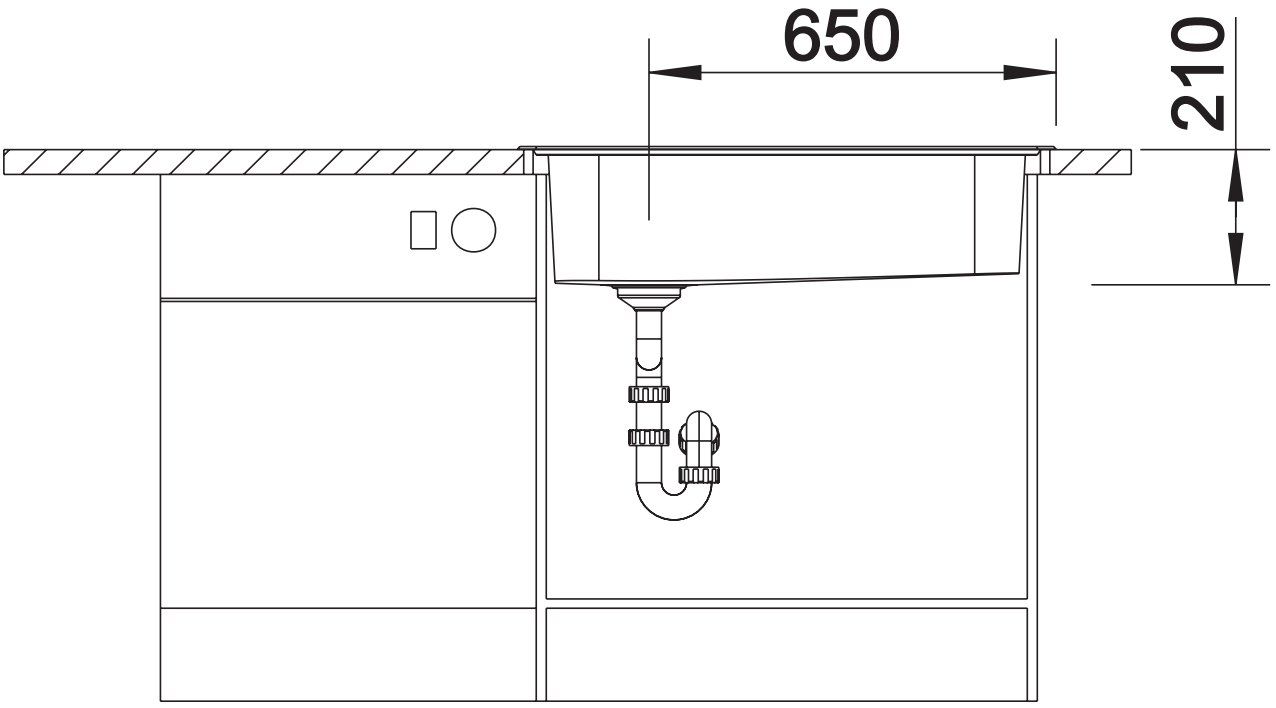

Front view



Side view