Product information sheet
BLANCORONDOSET

Item no. 513310

Benefits



- Timeless sink design
- Optional accessories available
- BLANCO RONDOSOL in combination with a round drainer

Planning information

- Undermount installation without overhang, required cut-out Ø 424 mm.
- Different brushing direction for drainer (lengthways) and bowl (circular) due to production.

Scope of supply

- waste kit with space-saving pipe
- 3 ½'' basket strainer
- seal

Details

Min cabinet size	600 mm

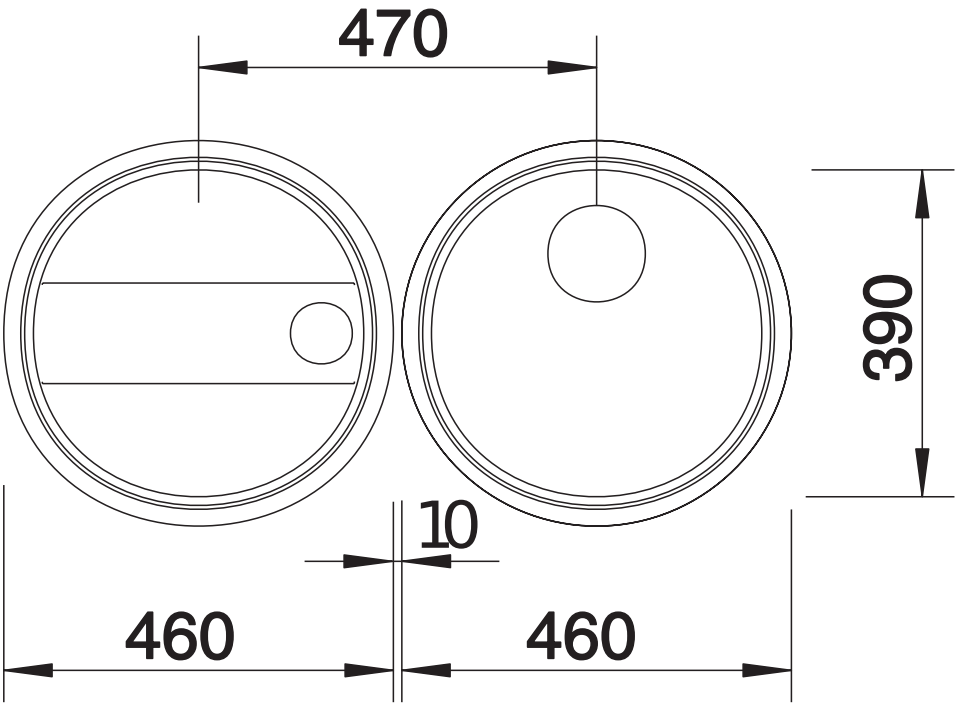

Top view

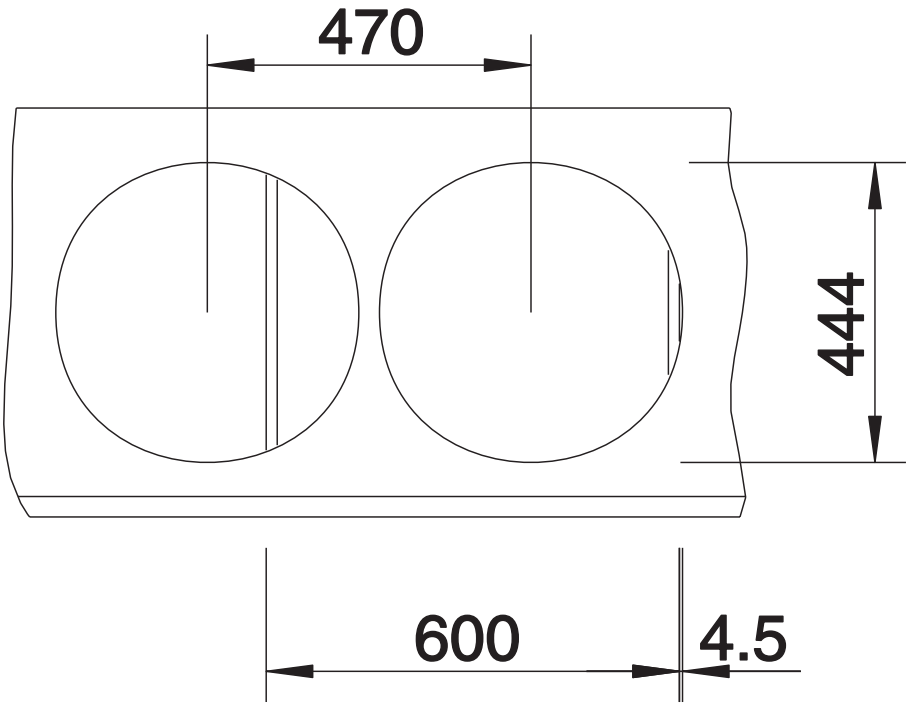

Cut-out

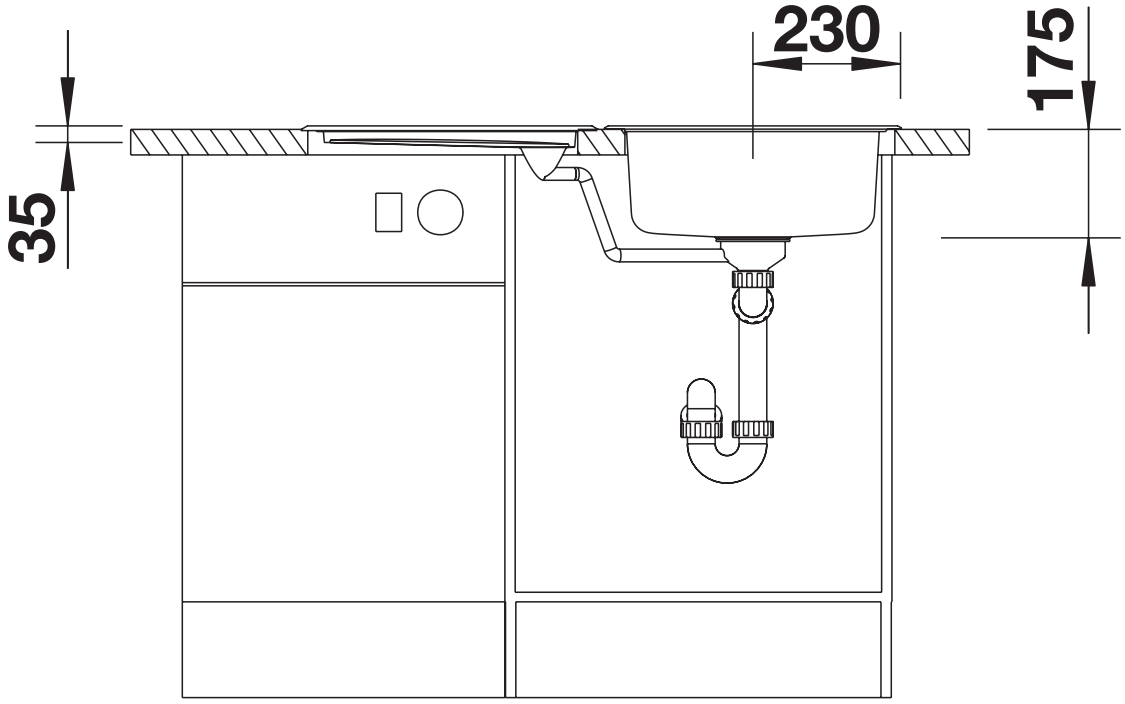

Front view

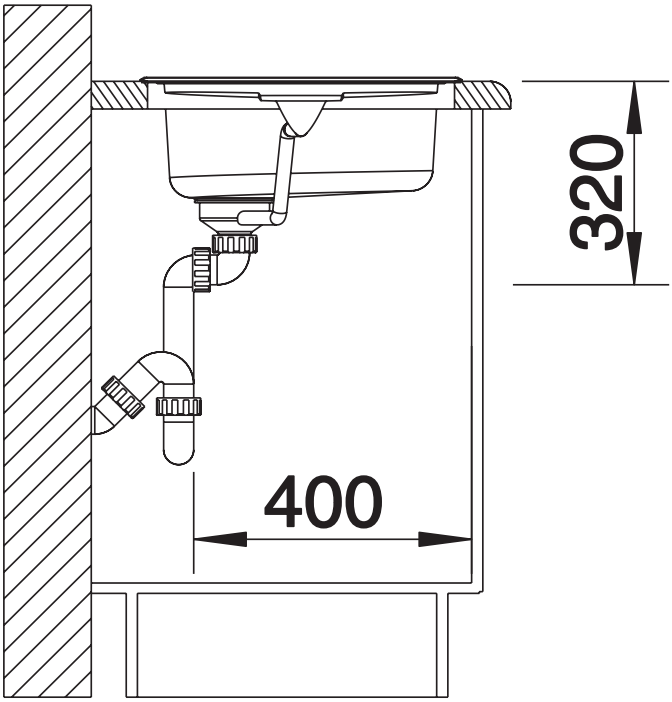

Side view