Product information sheet QUATRUS R15 400/400-IU

Item no. 237586

Benefits

- Versatile bowl programme for the most diverse requirements
- Elegant flat rim for inset installation and undermounting
- Extra-large and deep bowls for maximum convenience
- Concise corner radii, modern and functional
- Higher functionality thanks to the eye-catching drain grooves in the base
- Compatible with the BLANCO Multi Match Accessory Set — double bowls allow retailers to demonstrate a two-zone setup: one bowl as a workstation with the Accessory Bundle and Cutting Board, the other for washing or additional tasks

Planning information

- Please order waste kit separately.
- BLANCO QUATRUS R15-IU - production on demand, minimum order quantity to be checked with BLANCO.

Scope of supply

- waste kit is not included in the scope of supply

Details

Min cabinet size 900 mm

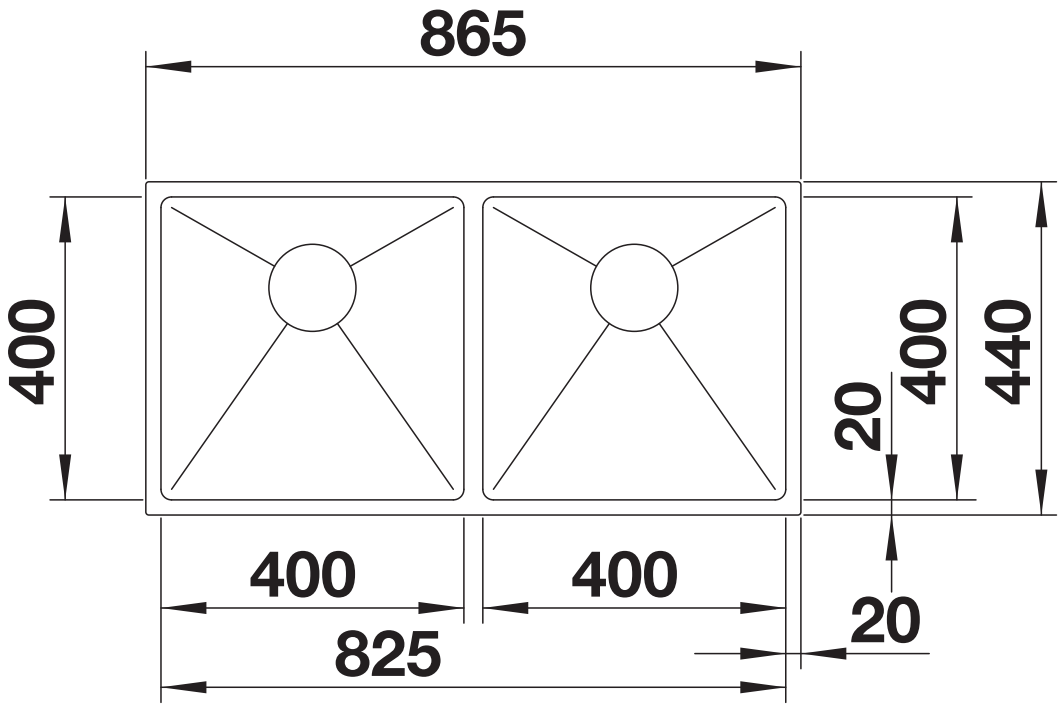

Top view

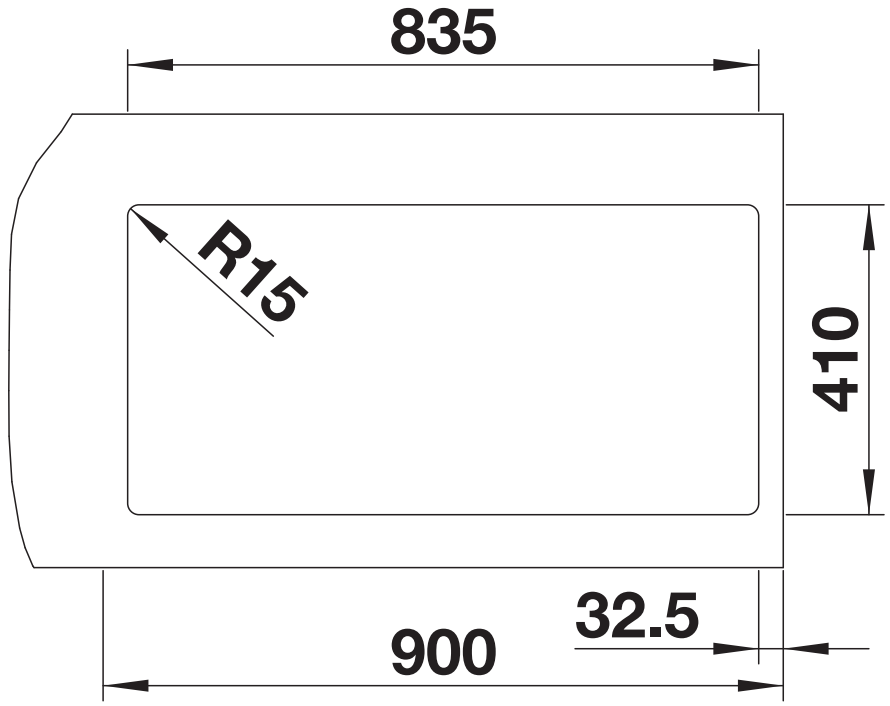

Cut-out

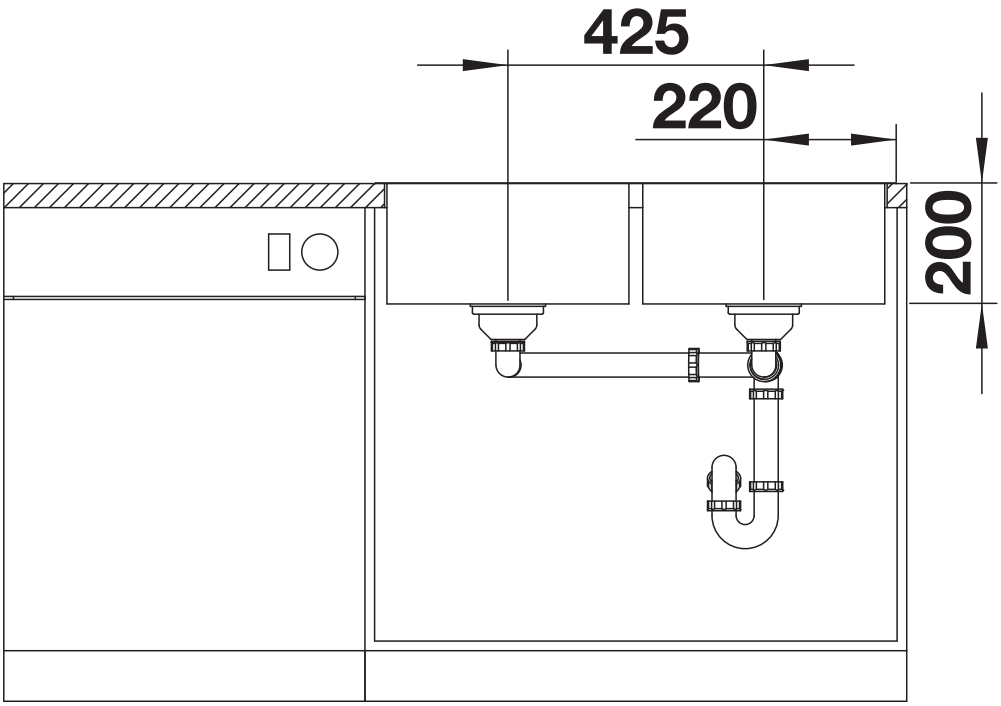

Front view

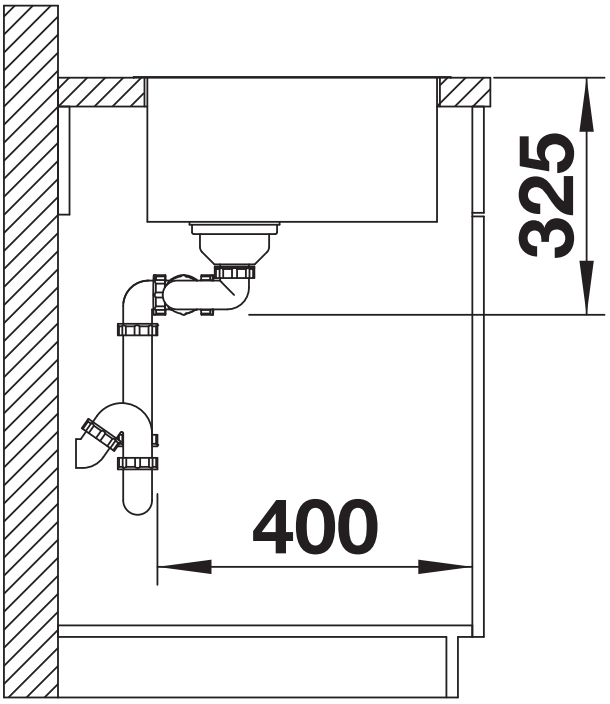

Side view