Product information sheet QUATRUS R15 800-IU

Item no. 235646

Benefits



- Versatile bowl programme for the most diverse requirements
- Elegant flat rim for inset installation and undermounting
- Extra-large and deep bowls for maximum convenience
- Concise corner radii, modern and functional
- Higher functionality thanks to the eye-catching drain grooves in the base
- Compatible with the BLANCO Multi Match Accessory Set: larger QUATRUS bowls let you create separate work zones with the Accessory Bundle and Cutting Board—so you can prep, rinse and drain efficiently at the sink.

Planning information

- Please order waste kit separately.
- BLANCO QUATRUS R15-IU - production on demand, minimum order quantity to be checked with BLANCO.

Scope of supply

- waste kit is not included in the scope of supply

Details

Min cabinet size 900 mm

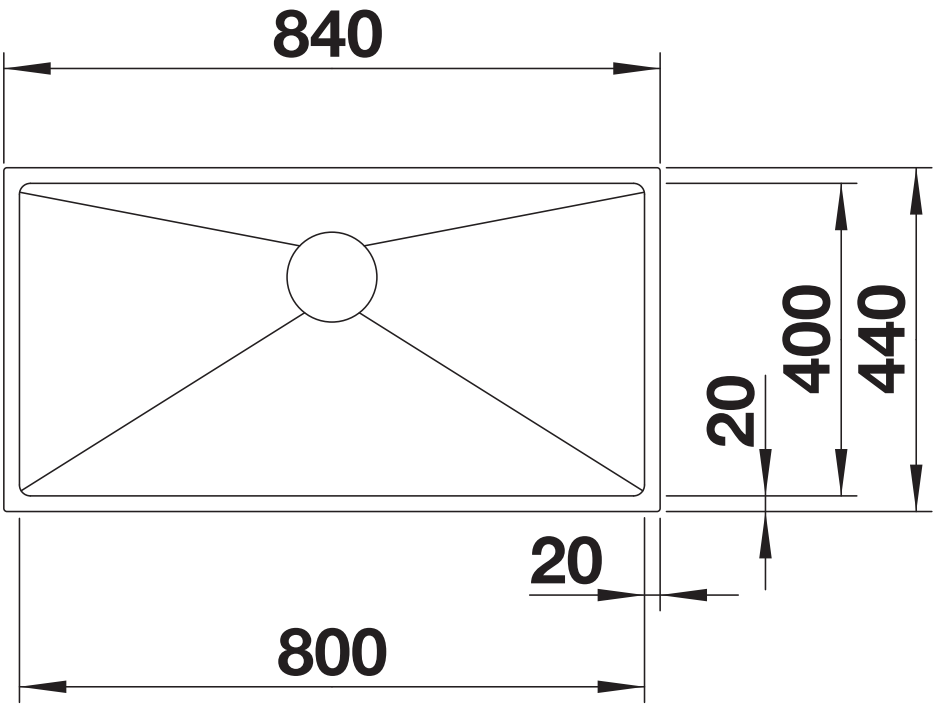

Top view

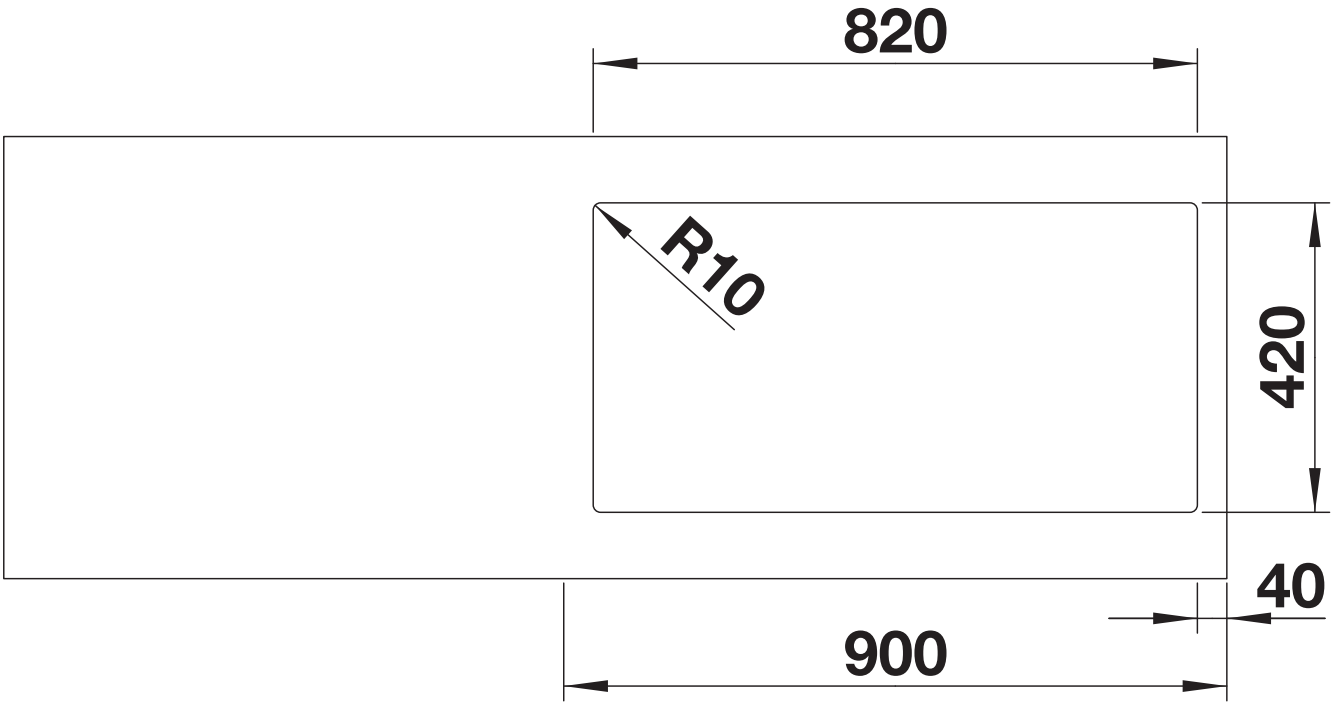

Cut-out

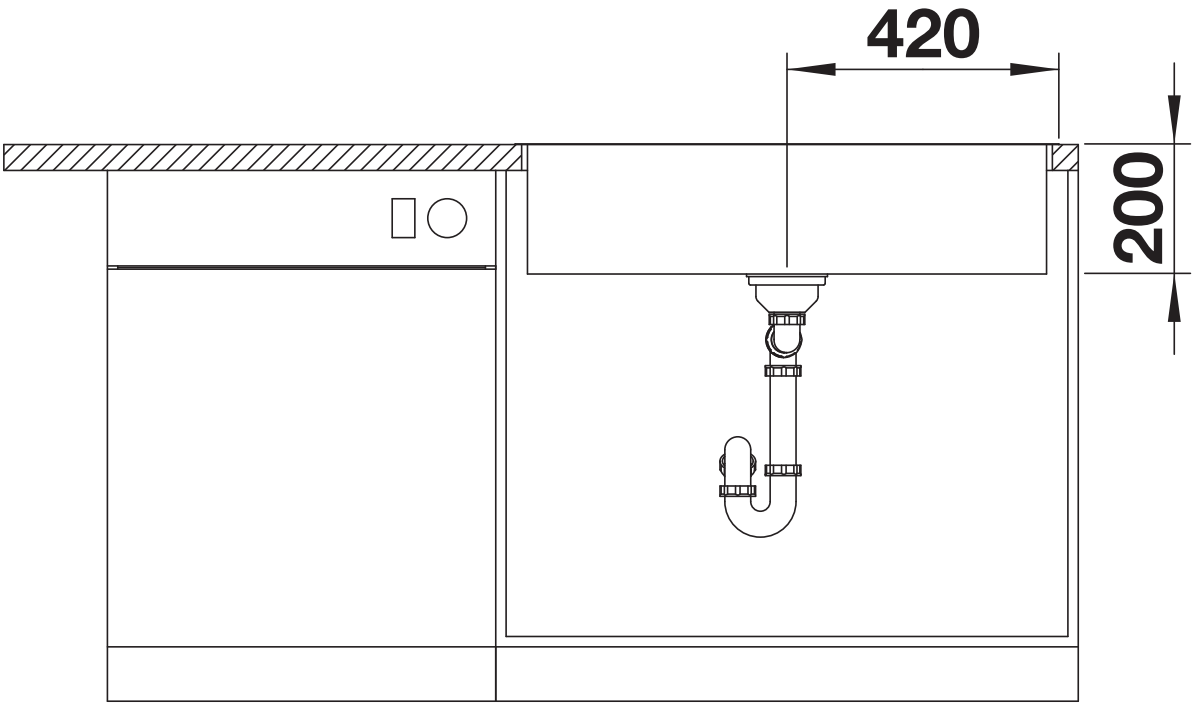

Front view

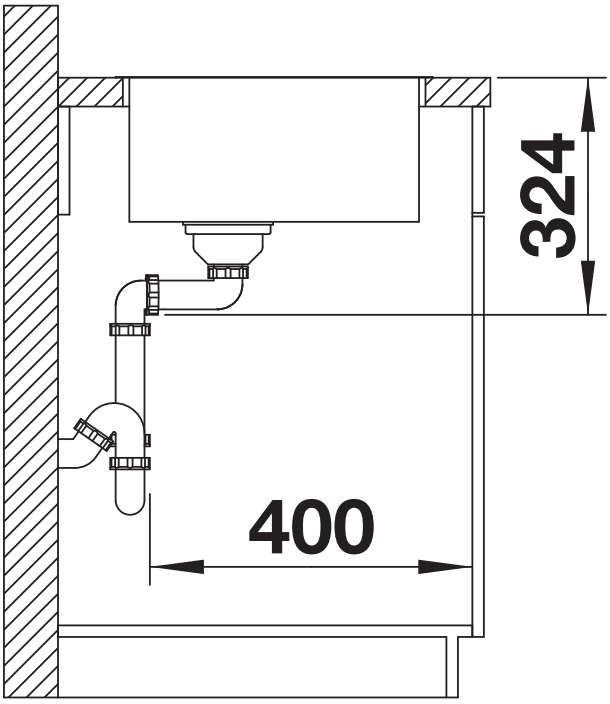

Side view