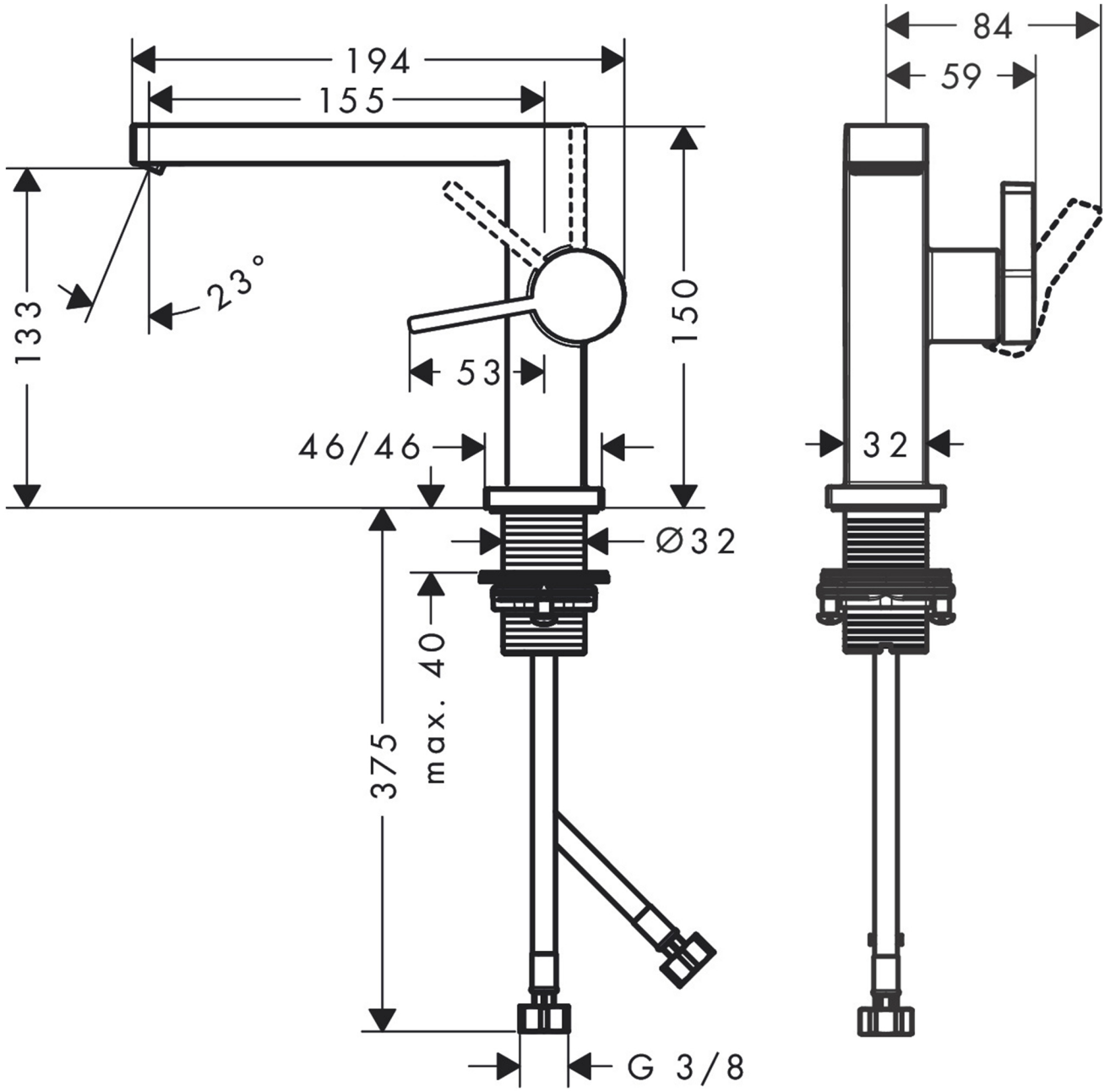
194
155
133
23°
150
53
46/46
Ø32
max. 40
375
G 3/8
84
59
32